GENIUS

GTC8

NITRO & ELECTRIC

2021

INSTRUCTION MANUAL

INDEX

	pag
1. DIFFERENTIALS	1
2. DIFFERENTIALS	2
3. DIFFERENTIALS	3
4. DIFFERENTIALS	4
5. DIFFERENTIALS	5
6. REAR BULKHEAD	6
7. REAR BULKHEAD	7
8. REAR REINFORCEMENT BRACE	8
9. LOWER SUSPENSION ARMS REA	9
10. REAR UP-RIGHTS	10
11. REAR UP-RIGHTS	11
12. GEAR BOX	12
13. GEAR BOX	13
14. GEAR BOX	14
15. GEAR BOX	15
16. CENTER SOLID SHAFT & MOTOR MOUNT	16
17. CENTER SOLID SHAFT & MOTOR MOUNT	17
18. CENTER SOLID SHAFT & MOTOR MOUNT	18
19. CENTER SOLID SHAFT & MOTOR MOUNT	19
20. CENTER SOLID SHAFT & MOTOR MOUNT	20
21. CENTER SOLID SHAFT & MOTOR MOUNT	21
22. CENTER SOLID SHAFT & MOTOR MOUNT	22
23. CENTER SOLID SHAFT & MOTOR MOUNT	23
24. CENTER MOUNT & BRAKES	24
25. CENTER MOUNT & BRAKES	25
26. FRONT BULKHEAD & SERVO SAVER	26
27. SERVO SAVER	27
28. FRONT BULKHEAD & SERVO SAVER	28
29. FRONT REINFORCEMENT BRACE	29
30. FRONT REINFORCEMENT BRACE	30
31. LOWER FRONT SUSPENSION ARMS	31
32. LOWER FRONT SUSPENSION ARMS	32
33. FRONT STEERING BLOCKS & SUSPENSION	33
34. FRONT STEERING BLOCKS & SUSPENSION	34
35. SHOCK ABSORBERS	35
36. SHOCK ABSORBERS	36
37. SHOCK ABSORBERS	37
38. RADIO PLATE NITRO	38
39. RADIO PLATE NITRO	39
40. CLUTCH & FUEL TANK	40
41. CLUTCH ASSEMBLY	41
42. CLUTCH ASSEMBLY	42
43. FINAL ASSEMBLY	43
44. FINAL ASSEMBLY	44
45. OPTIONALS	45

BAG.1

6T851276 DIFFERENTIAL 42T -SET

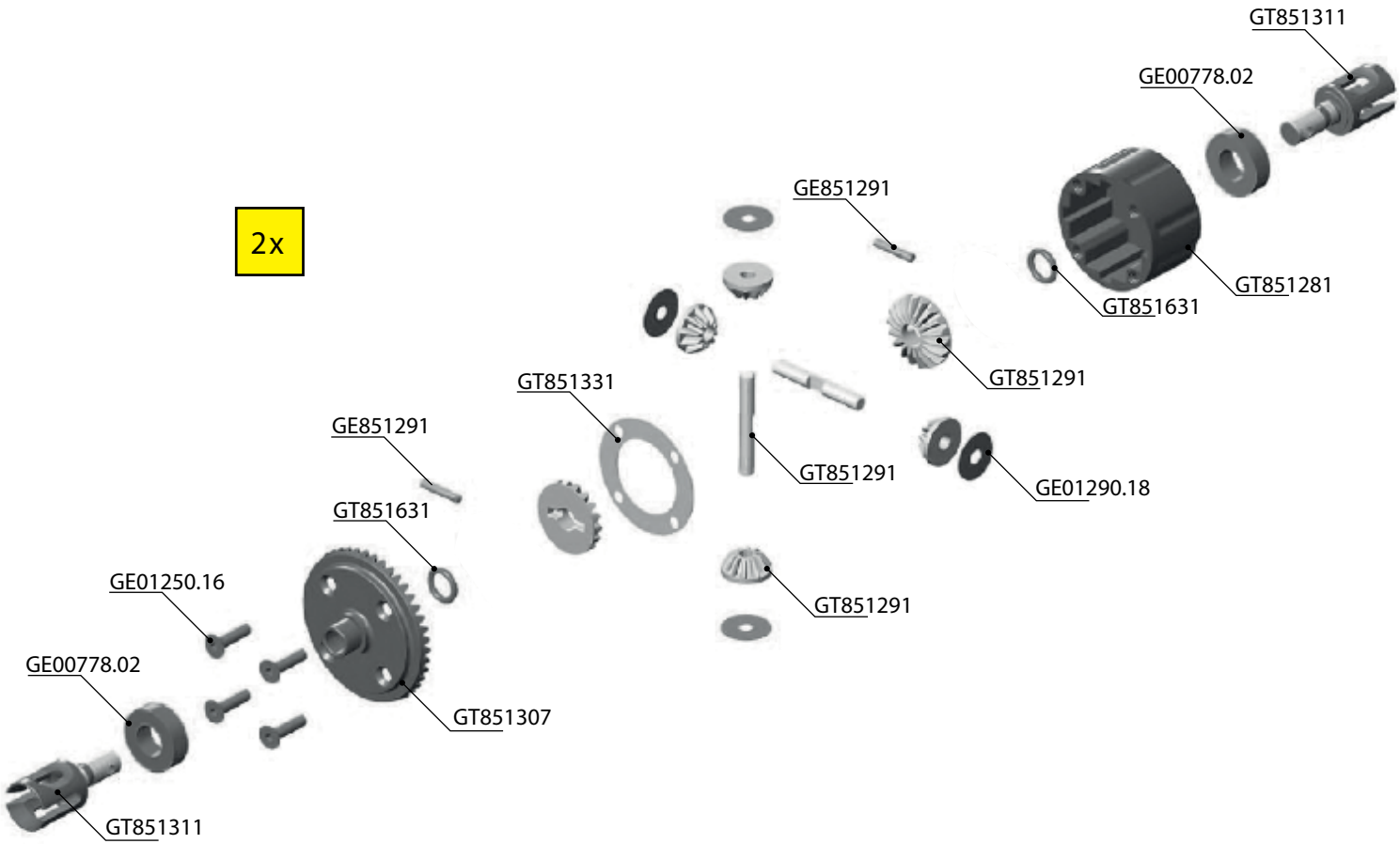

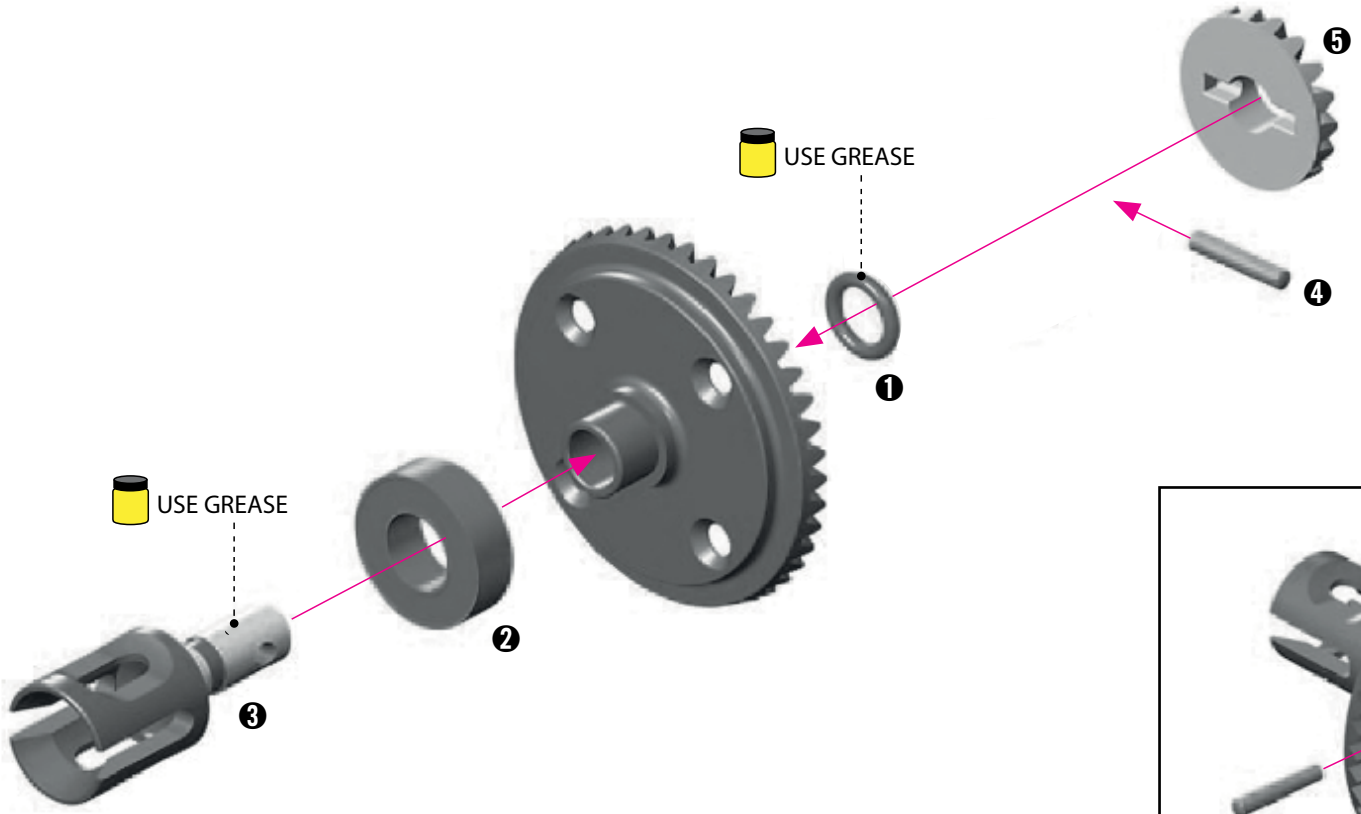

DETAIL

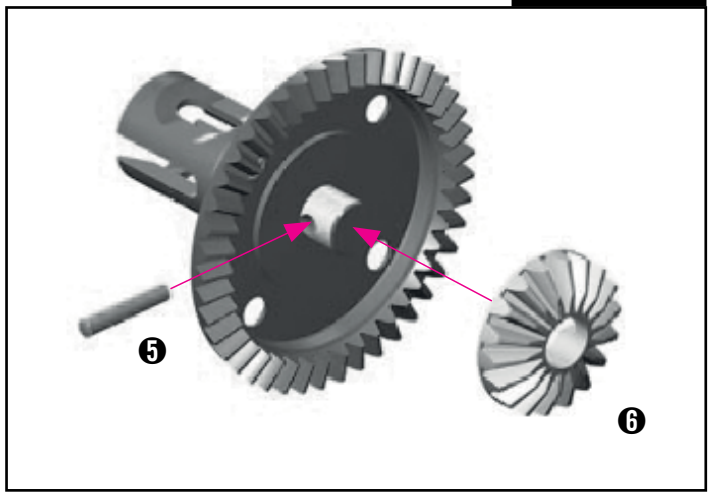

2x

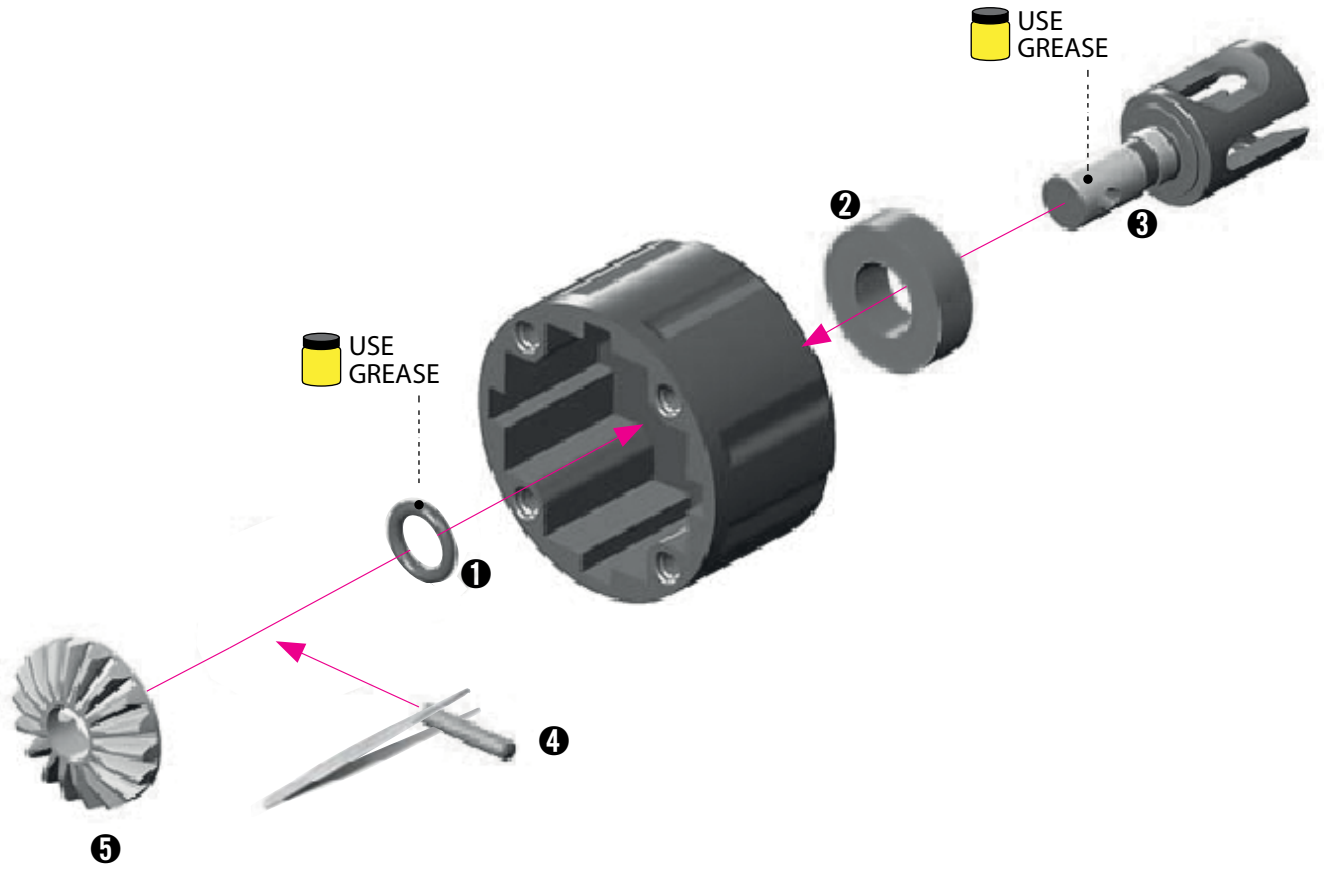

FRONT diff: 300.000cSt / REAR diff: 60.000cSt

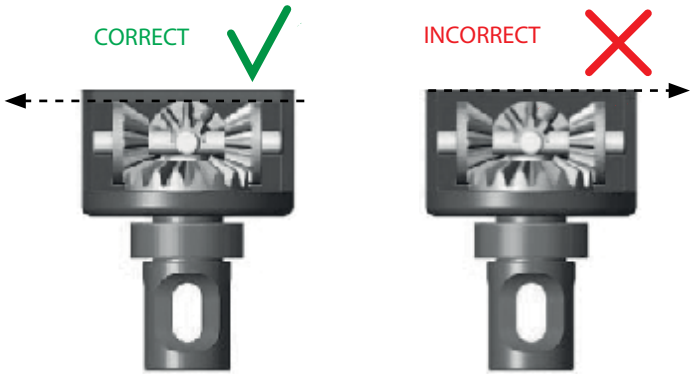

USE OIL

Fill the differentials with oil just above the satellite gears.

Tighten the screws equally

Finish tightening in this order

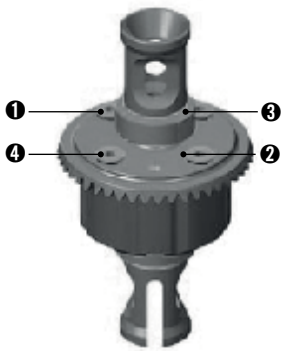

After assembly the differentials should have a length of 32.3~32.5 mm measured from the ends of the installed ball-bearings.
If differentials are longer, retighten the 4 screws holding the crown gears.

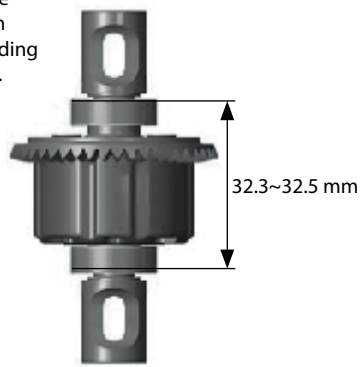

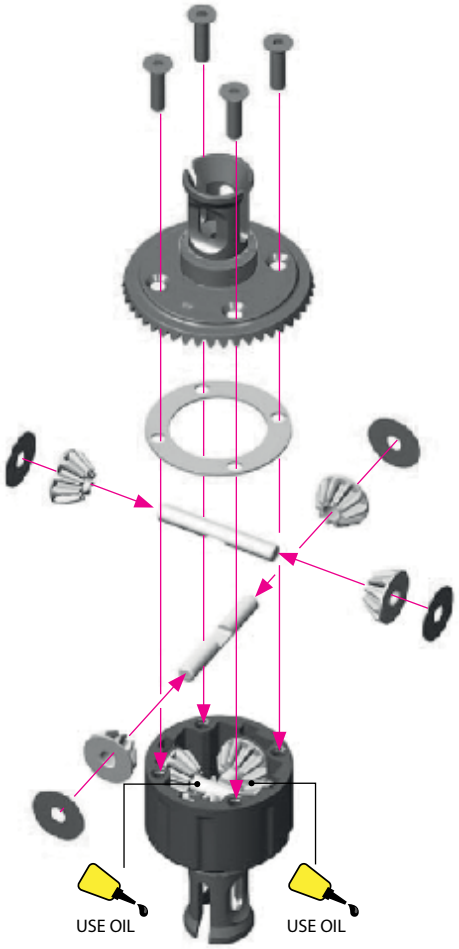

FRONT & REAR DIFF GEAR MESH ADJUSTMENT

THE LOCATION OF THE SHIM(S) DEPENDS ON WHETHER YOU ARE TRYING TO CLOSE OR OPEN THE GAP.

If there is too much or too little diff side play, this may create non-optimal gear mesh between the diff gear and the pinion drive gear. This is easily resolved by inserting 1 or 2 of the included thin shims behind a diff outdrive ball-bearing , depending on how much play there is.

TO CLOSE A WIDE GAP

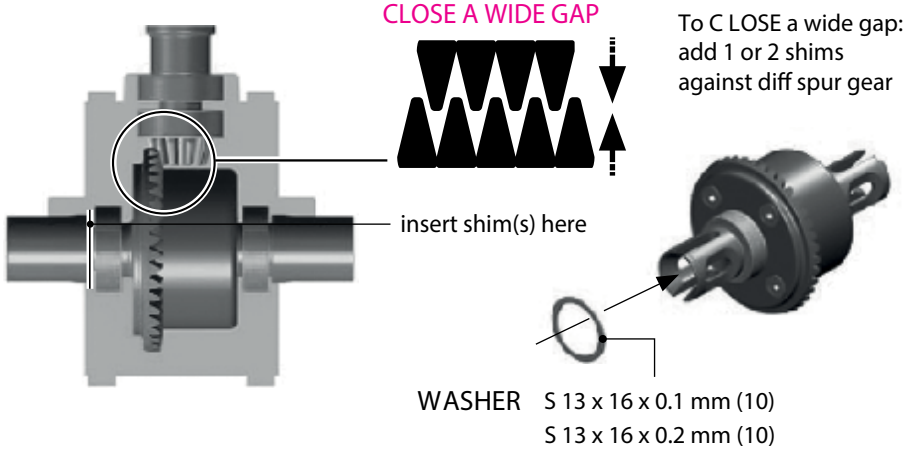

TO OPEN A NARROW GAP

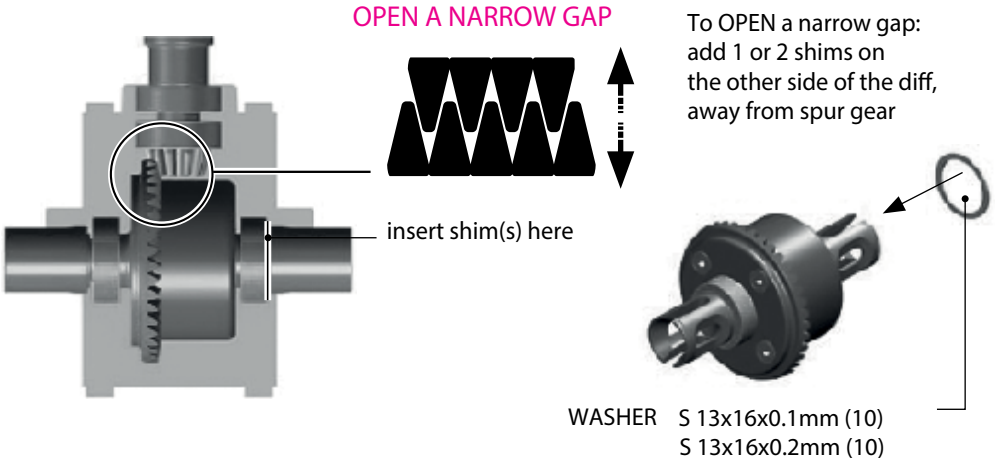

BAG.2 STEP A

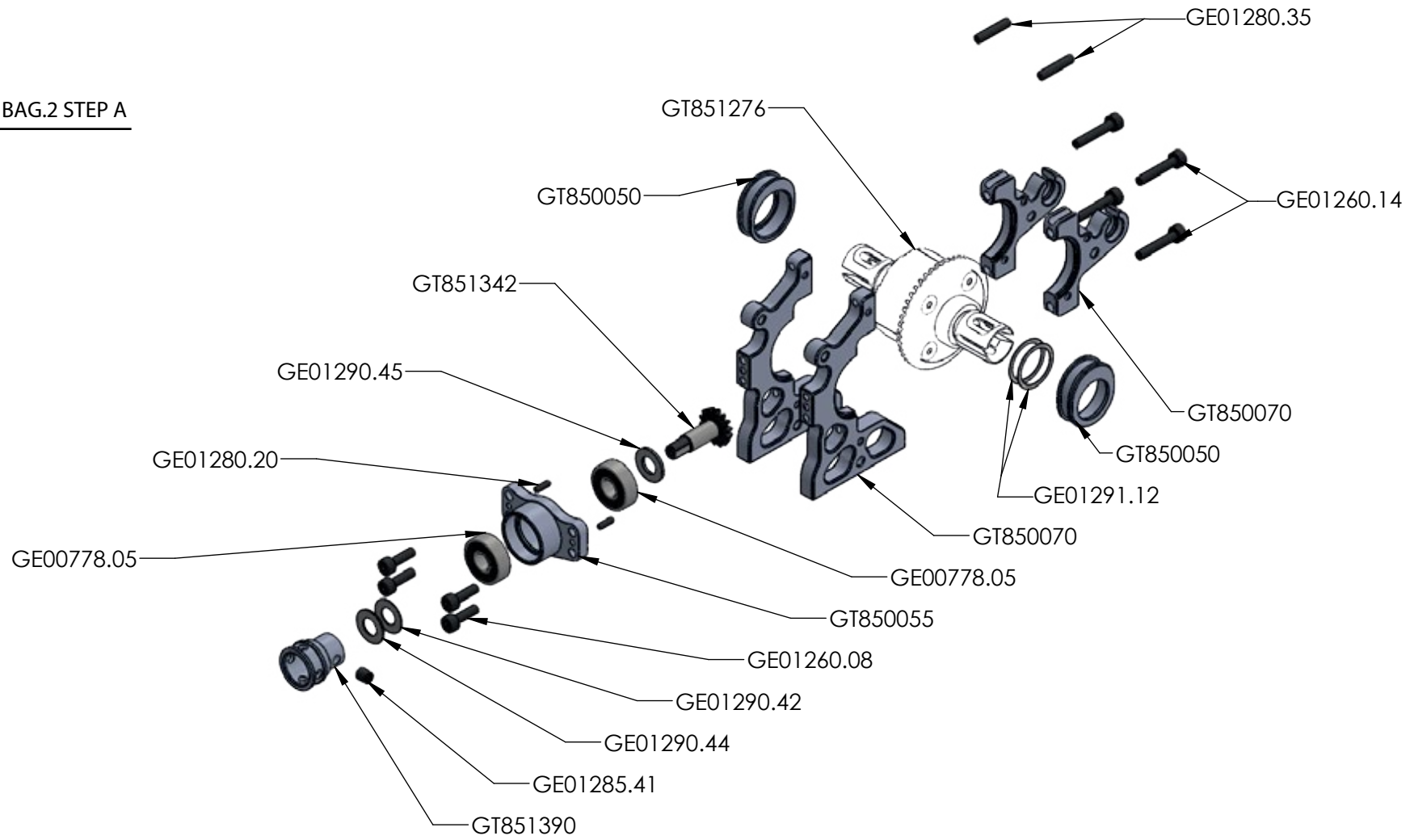
GE01280.35
GT851276
GT850050
GE01260.14
GT851342
GE01290.45
GT850070
GE01280.20
GT850050
GE01291.12
GT850070
GE00778.05
GE00778.05
GT850055
GE01260.08
GE01290.42
GE01290.44
GE01285.41
GT851390

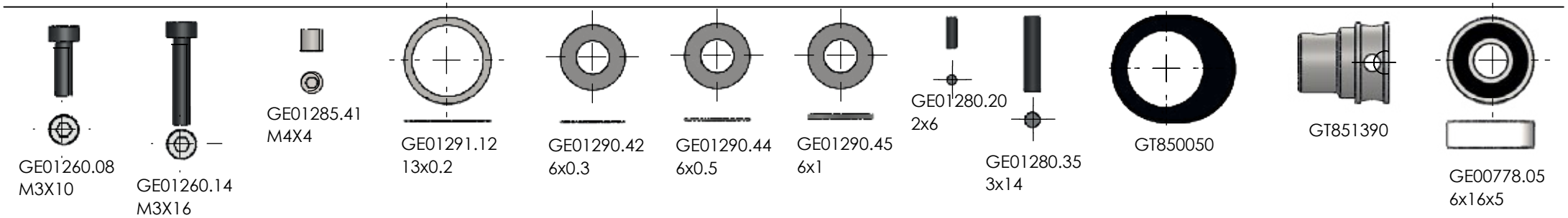
GE01260.08
M3X10
GE01260.14
M3X16
GE01285.41
M4X4
GE01291.12
13x0.2
GE01290.42
6x0.3
GE01290.44
6x0.5
GE01290.45
6x1
GE01280.20
2x6
GE01280.35
3x14
GT850050
GT851390
GE00778.05
6x16x5

BAG.2 STEP B

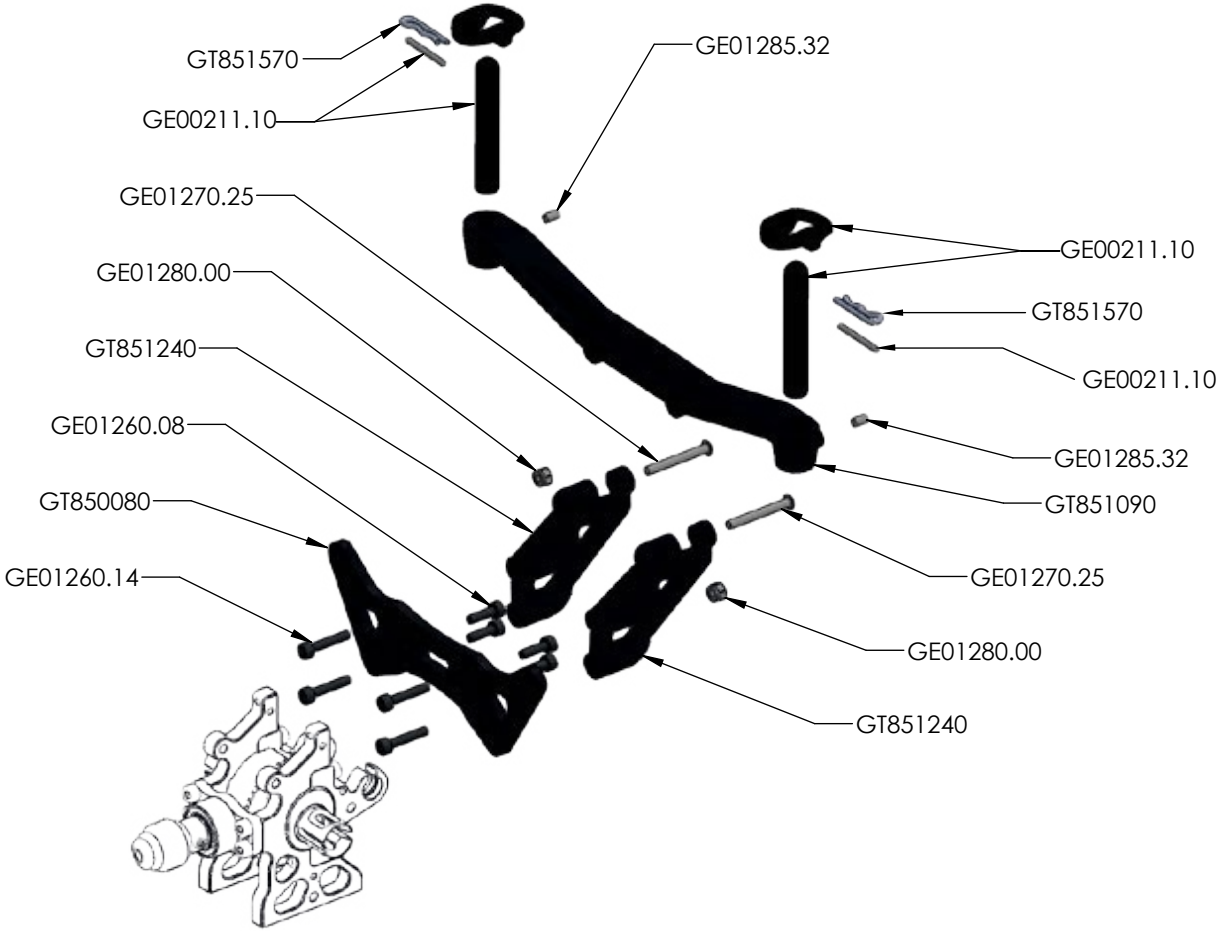
GT851570
GE00211.10
GE01270.25
GE01280.00
GT851240
GE01260.08
GT850080
GE01260.14
GE01285.32
GE00211.10
GT851570
GE00211.10
GE01285.32
GT851090
GE01270.25
GE01280.00
GT851240

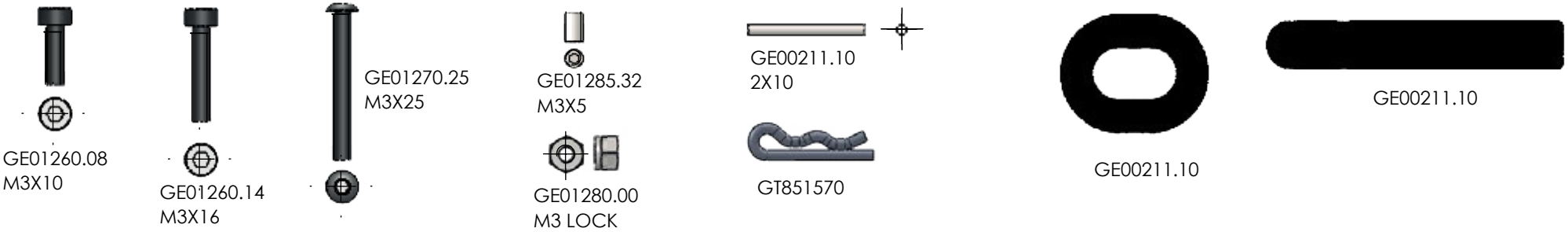
GE01260.08
M3X10
GE01260.14
M3X16
GE01270.25
M3X25
GE01285.32
M3X5
GE01280.00
M3 LOCK
GE00211.10
2X10
GT851570
GE00211.10
GE00211.10

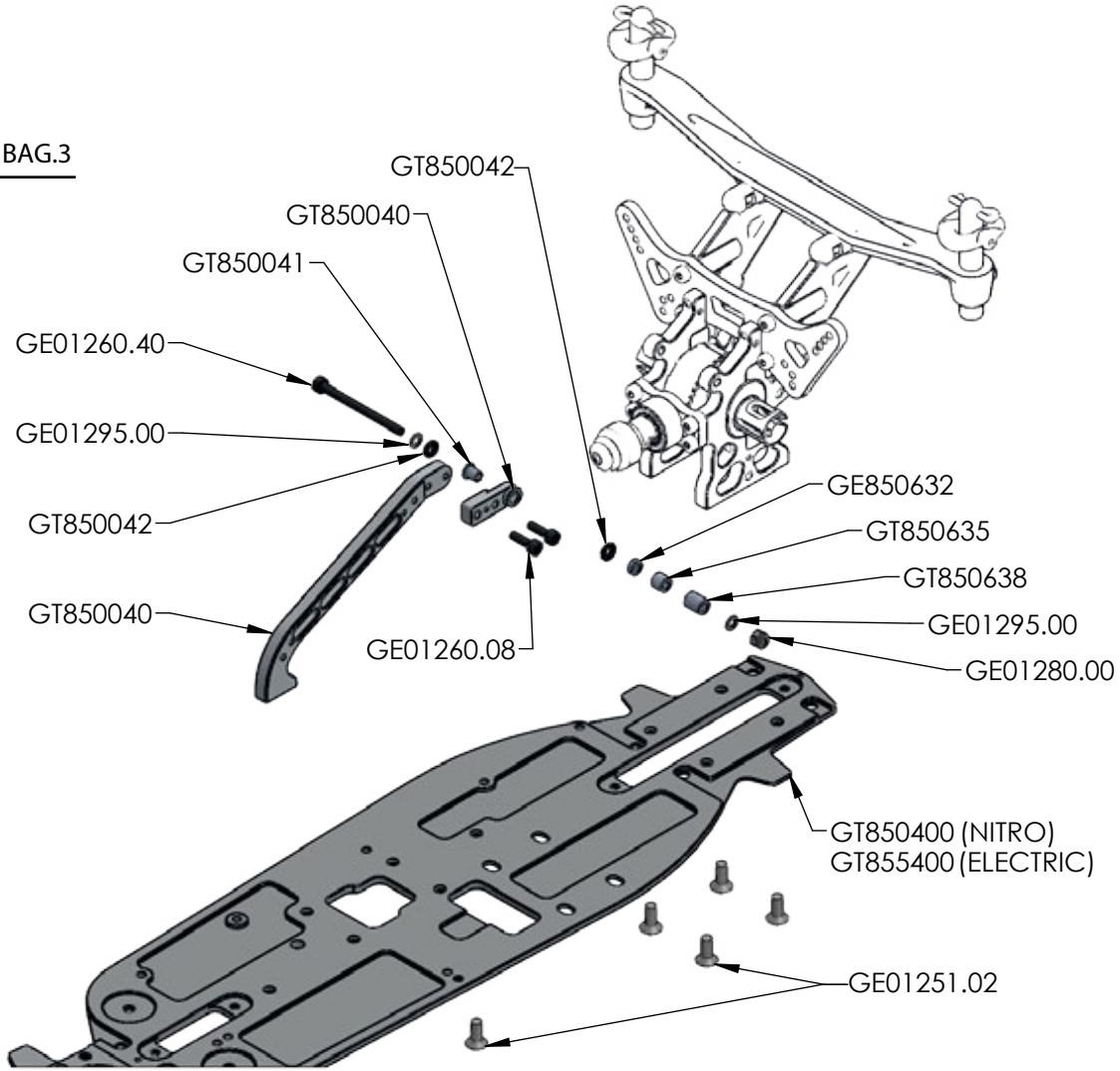
BAG.3
GT850042
GT850040
GT850041
GE01260.40
GE01295.00
GT850042
GT850040
GE01260.08
GE850632
GT850635
GT850638
GE01295.00
GE01280.00
GT850400 (NITRO)
GT855400 (ELECTRIC)
GE01251.02

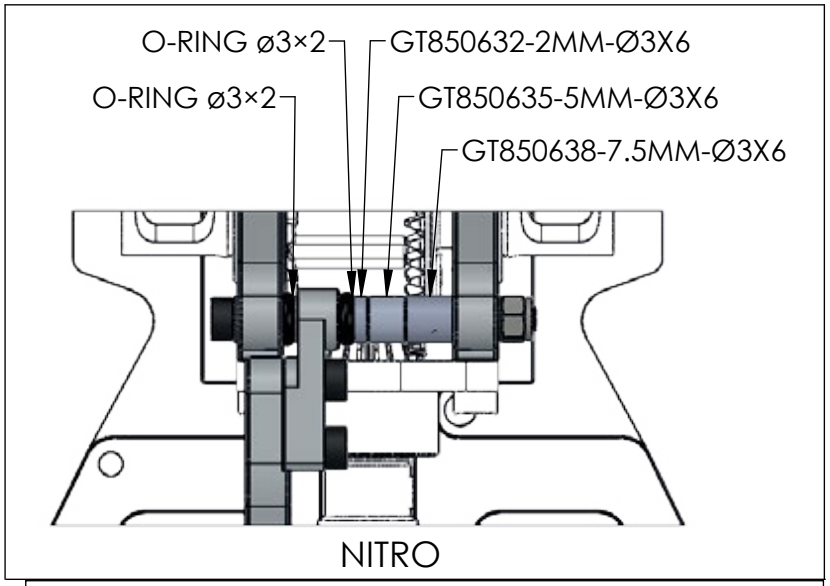
O-RING ø3×2
O-RING ø3×2
GT850632-2MM-Ø3X6
GT850635-5MM-Ø3X6
GT850638-7.5MM-Ø3X6
NITRO

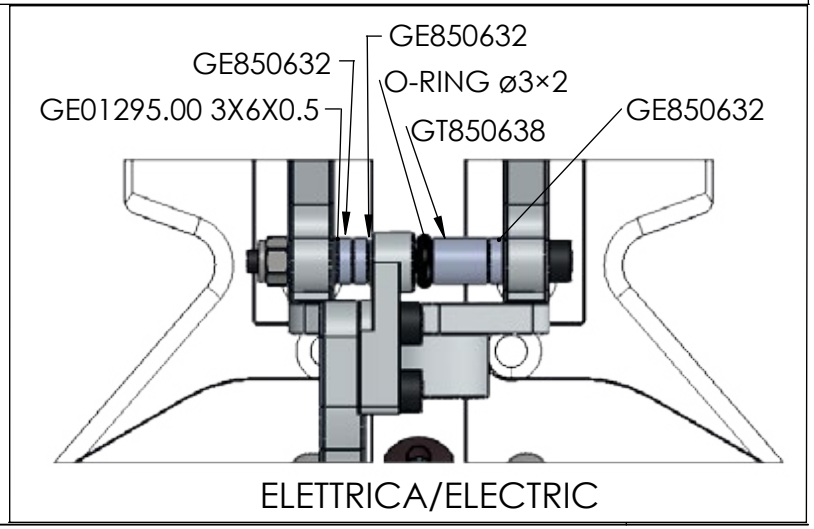
GE850632
GE850632
O-RING ø3×2
GE01295.00 3X6X0.5
GT850638
GE850632
ELETTRICA/ELECTRIC

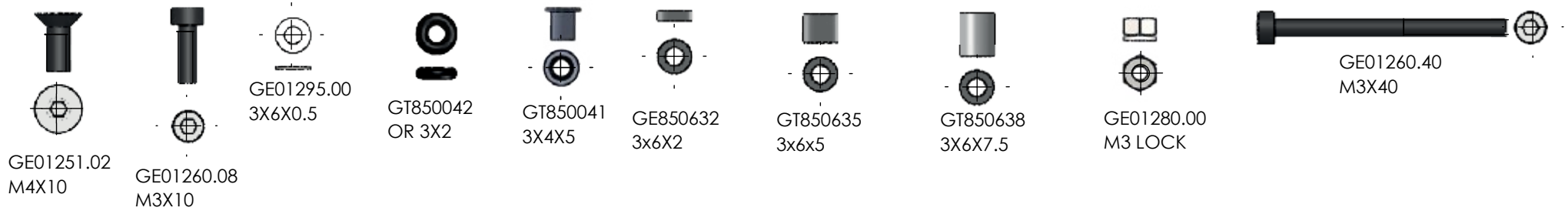
GE01251.02
M4X10
GE01260.08
M3X10
GE01295.00
3X6X0.5
GT850042
OR 3X2
GT850041
3X4X5
GE850632
3x6X2
GT850635
3x6x5
GT850638
3X6X7.5
GE01280.00
M3 LOCK
GE01260.40
M3X40

BAG.4

ALL POSSIBLE MOUNTING ALTERNATIVES OF ECCENTRIC BUSHINGS

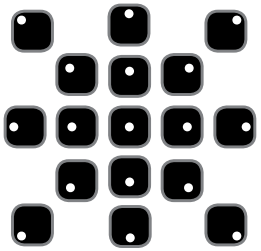

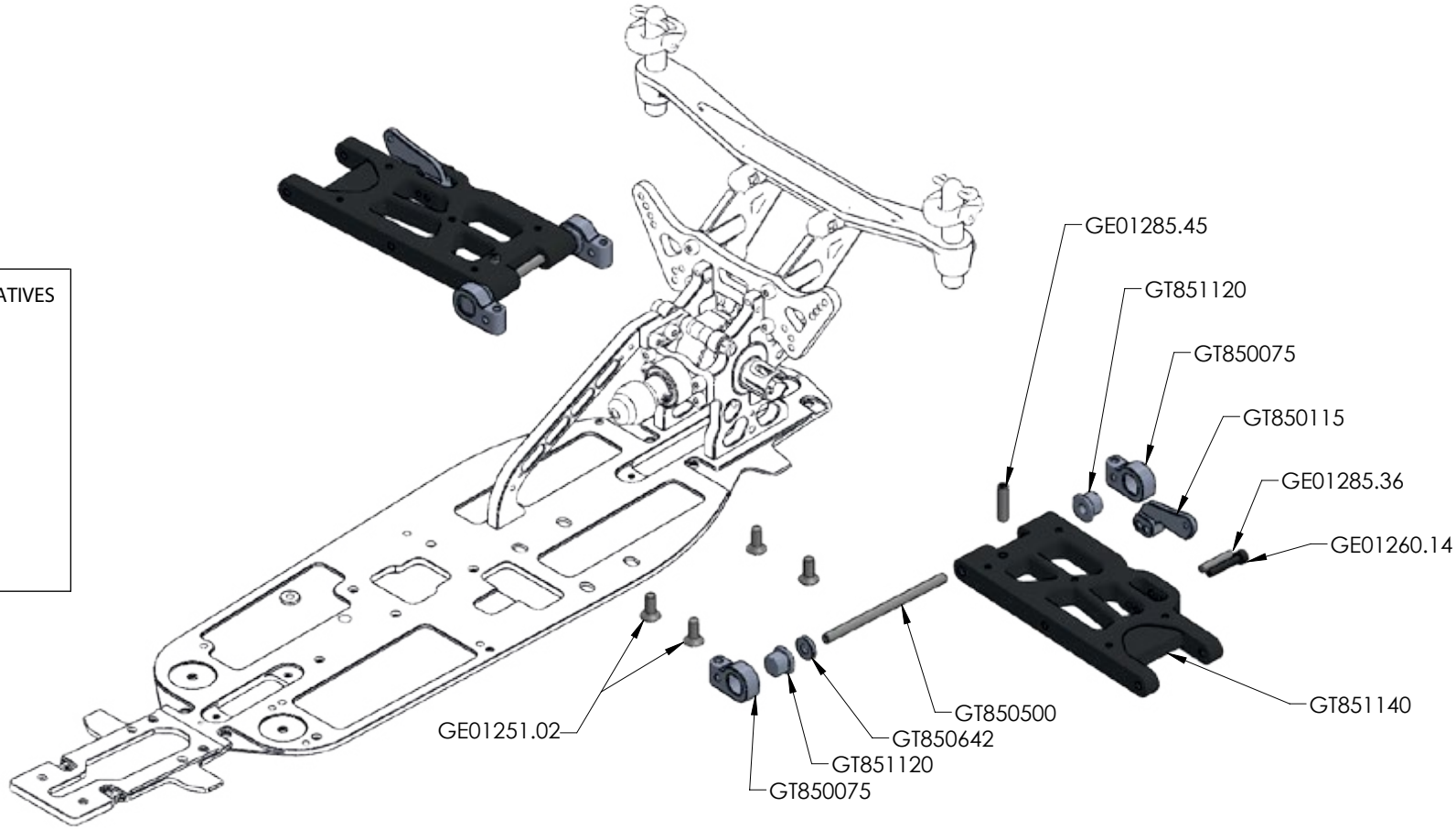

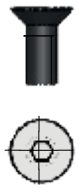

GE01251.02
M4X10

GE01260.14
M3X16

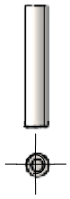

GE01285.36
M3X16

GE01285.45
M4X12

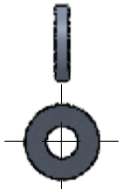

GT850642
4X10X2

GT850500
4X64

BAG.5 STEP A

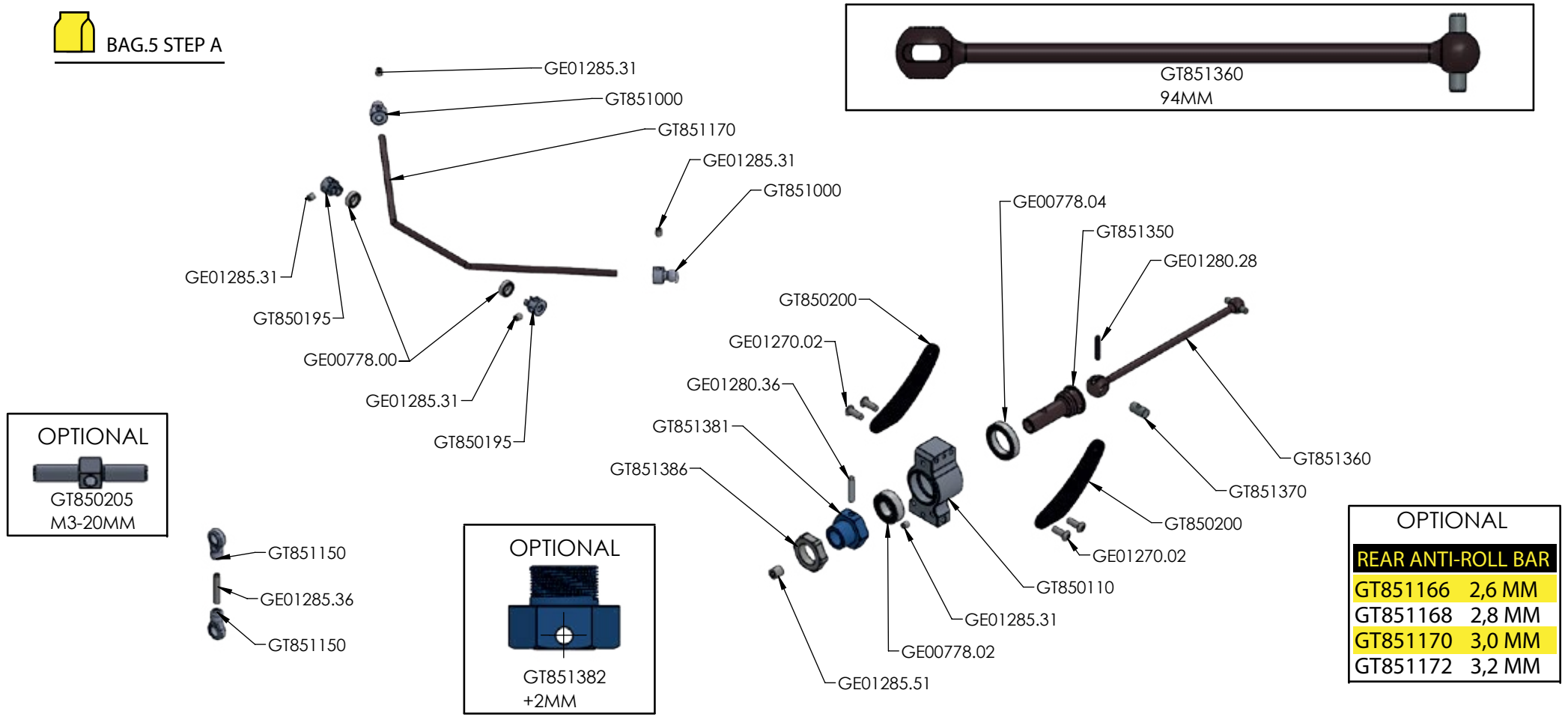
GE01285.31
GT851000
GT851170
GE01285.31
GT851000
GE01285.31
GT850195
GE00778.00
GE01285.31
GT850195
GT851360
94MM
GE00778.04
GT851350
GE01280.28
GT850200
GE01270.02
GE01280.36
GT851381
GT851386
GT851360
GT851370
GT850200
GE01270.02
GT850110
GE01285.31
GE00778.02
GE01285.51
OPTIONAL
GT850205
M3-20MM
GT851150
GE01285.36
GT851150
OPTIONAL
GT851382
+2MM
OPTIONAL
REAR ANTI-ROLL BAR
GT851166 2,6 MM
GT851168 2,8 MM
GT851170 3,0 MM
GT851172 3,2 MM

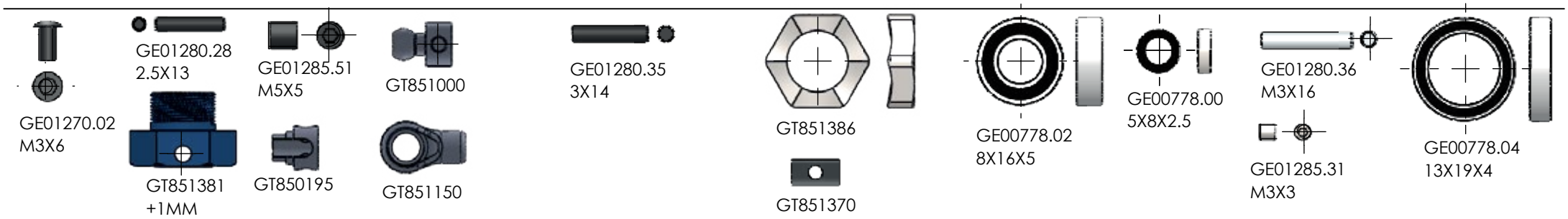
GE01270.02
M3X6
GE01280.28
2.5X13
GE01285.51
M5X5
GT851000
GE01280.35
3X14
GT851386
GE00778.02
8X16X5
GE00778.00
5X8X2.5
GE01280.36
M3X16
GE00778.04
13X19X4
GT851381
+1MM
GT850195
GT851150
GT851370
GE01285.31
M3X3

BAG.5 STEP B

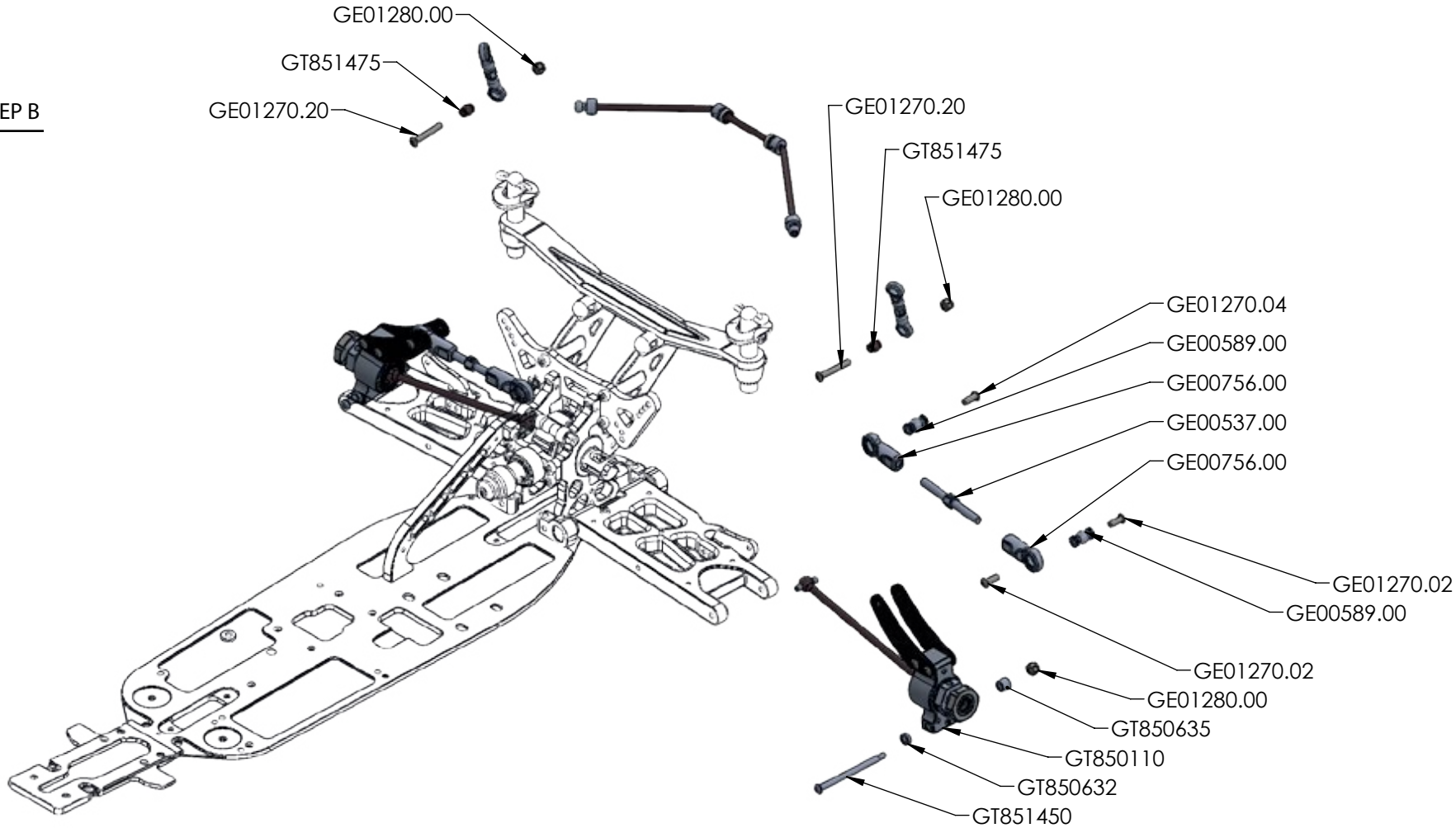
GE01280.00
GT851475
GE01270.20
GE01270.20
GT851475
GE01280.00
GE01270.04
GE00589.00
GE00756.00
GE00537.00
GE00756.00
GE01270.02
GE00589.00
GE01270.02
GE01280.00
GT850635
GT850110
GT850632
GT851450

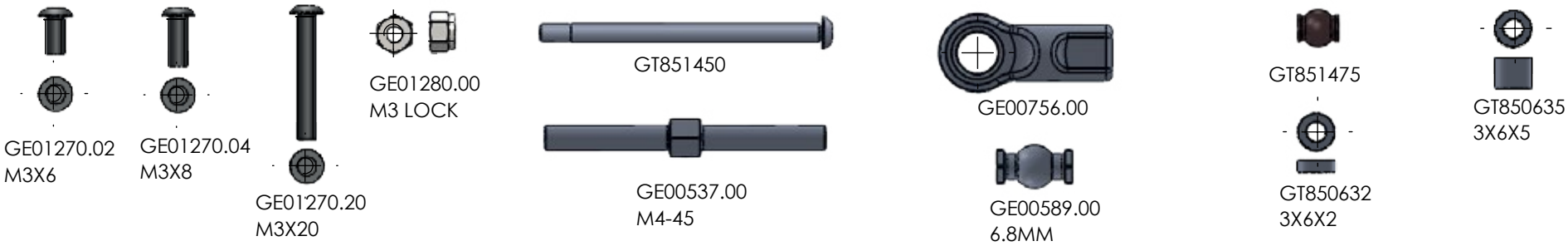
GE01270.02
M3X6
GE01270.04
M3X8
GE01270.20
M3X20
GE01280.00
M3 LOCK
GT851450
GE00537.00
M4-45
GE00756.00
GE00589.00
6.8MM
GT851475
GT850632
3X6X2
GT850635
3X6X5

BAG.6

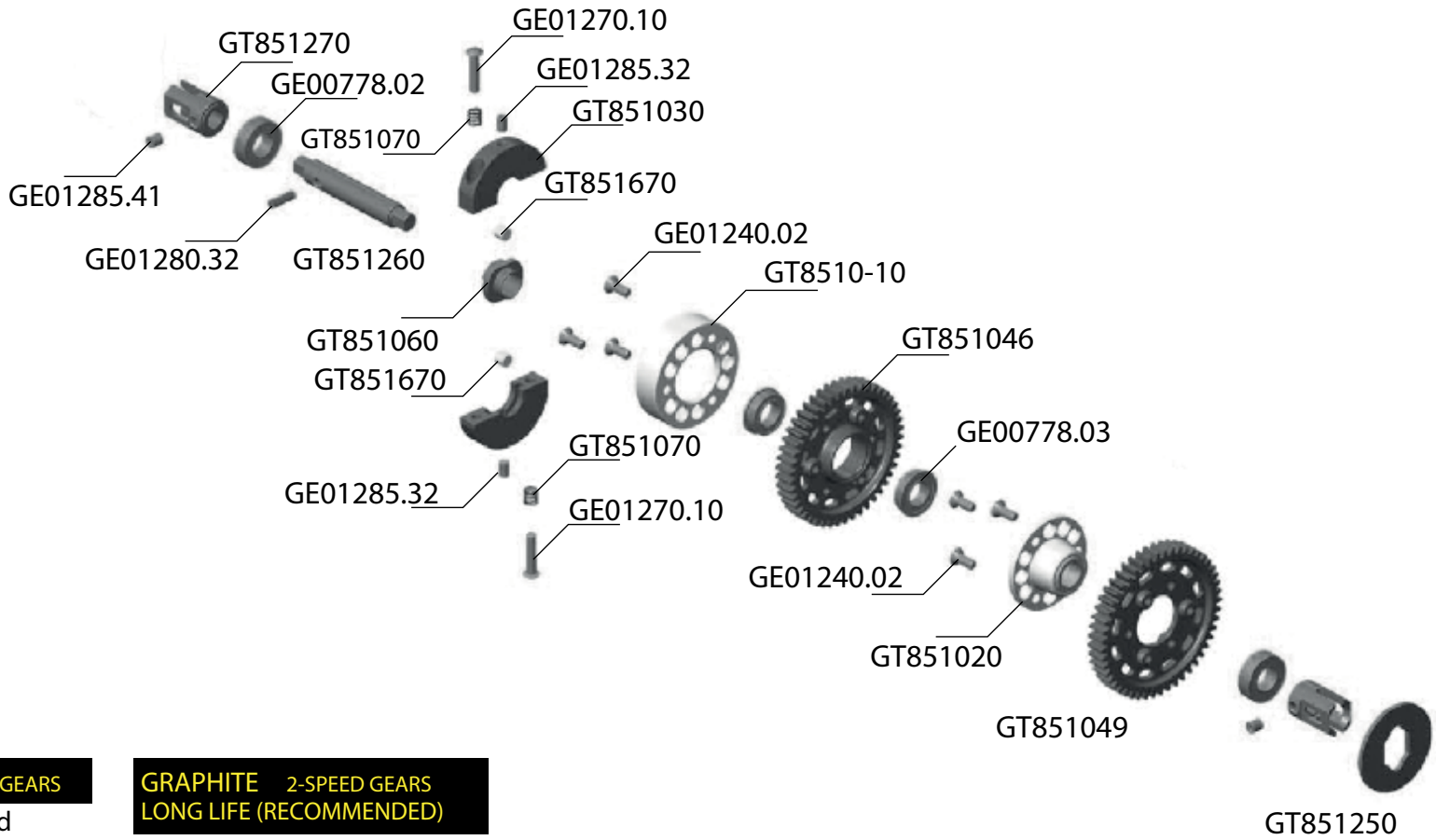

COMPOSITE	2-SPEED GEARS	
GT851045	45T	2nd
GT851046	46T	2nd
GT851047	47T	2nd
GT851048	48T	1st
GT851049	49T	1st
GT851050	50T	1st

GRAPHITE 2-SPEED GEARS LONG LIFE (RECOMMENDED)		
GT851945	45T	2nd
GT851946	46T	2nd
GT851947	47T	2nd
GT851948	48T	1st
GT851949	49T	1st
GT851950	50T	1st

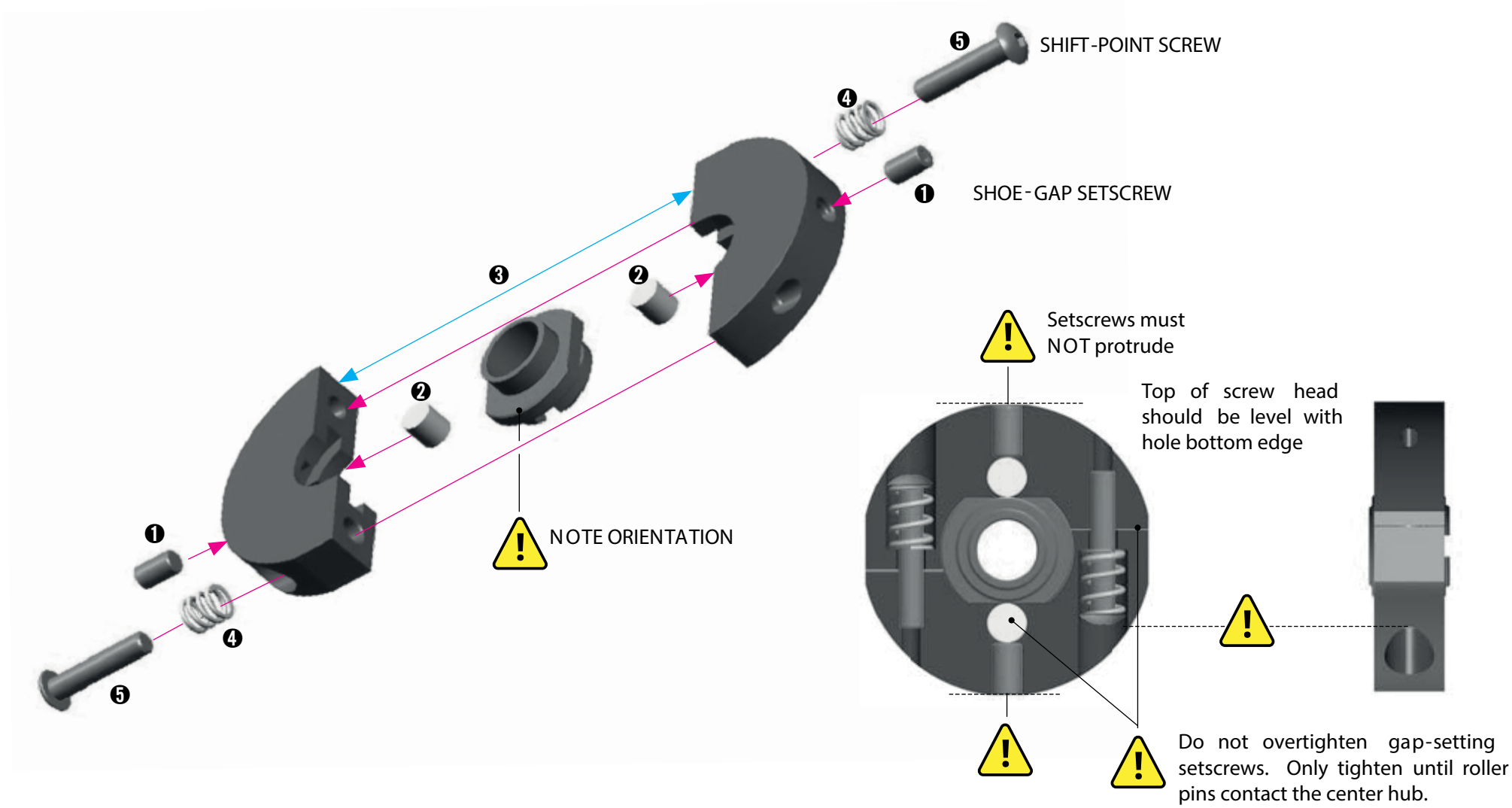
❺ SHIFT-POINT SCREW
❹
❶ SHOE-GAP SETSCREW
❸
❷
❷
❶
❹
❺
NOTE ORIENTATION
Setscrews must NOT protrude
Top of screw head should be level with hole bottom edge
Do not overtighten gap-setting setscrews. Only tighten until roller pins contact the center hub.

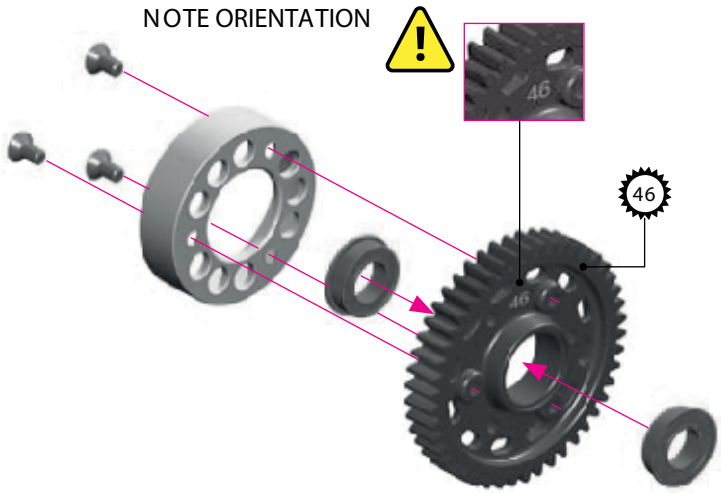
NOTE ORIENTATION
46
46

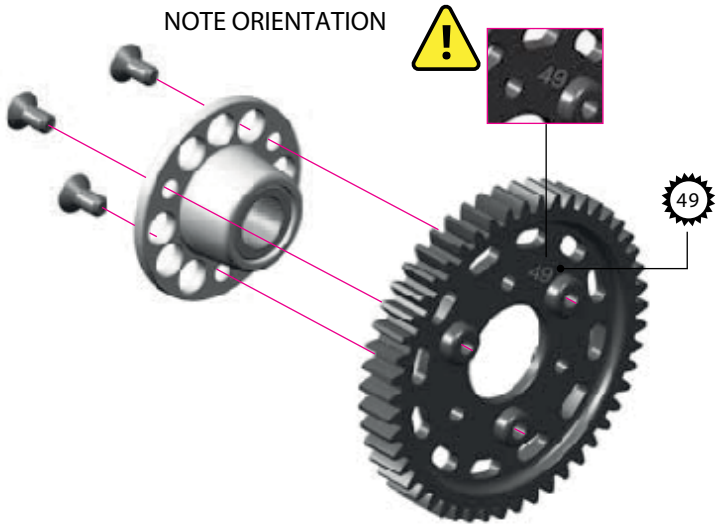
NOTE ORIENTATION
49
49
49

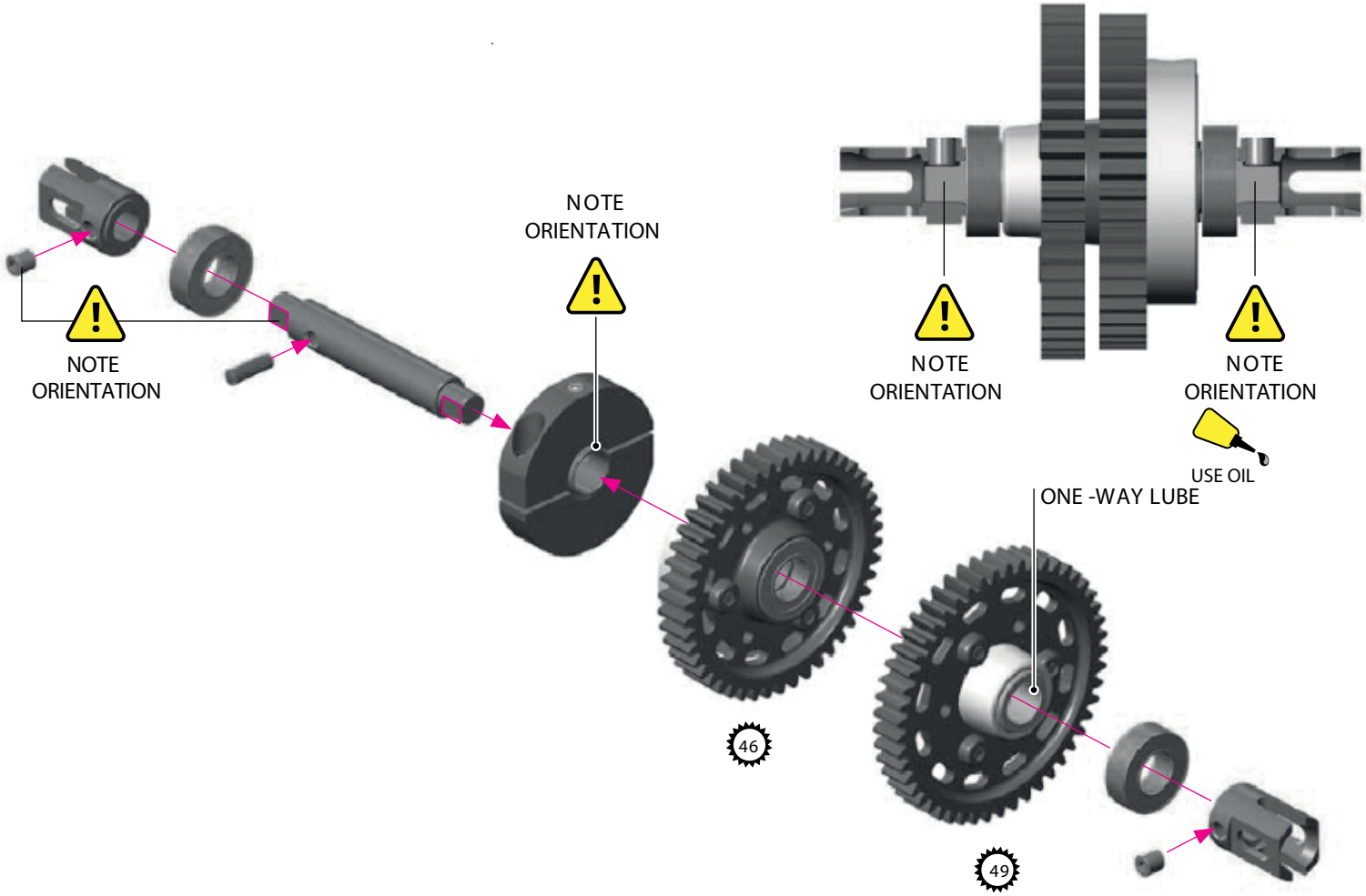
NOTE
ORIENTATION
NOTE
ORIENTATION
NOTE
ORIENTATION
NOTE
ORIENTATION
USE OIL
ONE -WAY LUBE
46
49

BAG.6 STEP A

GE01270.30
GE01285.41
GT851049
GE01285.41
GE1250.01
GE01270.04
GT855040
GT855095
GT855020
GT851270
GE00778.02
GE01285.41
GT855080
GT851270
GT855070
GT851400
GE00778.02
GT855090
GE01270.04
GT855030
GT855050

POSTERIORE/REAR

GT855095
95MM

ANTERIORE/FRONT

GT851400
86MM

GE01250.01
M3X6

GE01270.04
M3X8

GE01270.30
M3X30

GE01285.41
M4X4

GT855080

GT851270

GT855030

GT855090

GE00778.02
8X16X5

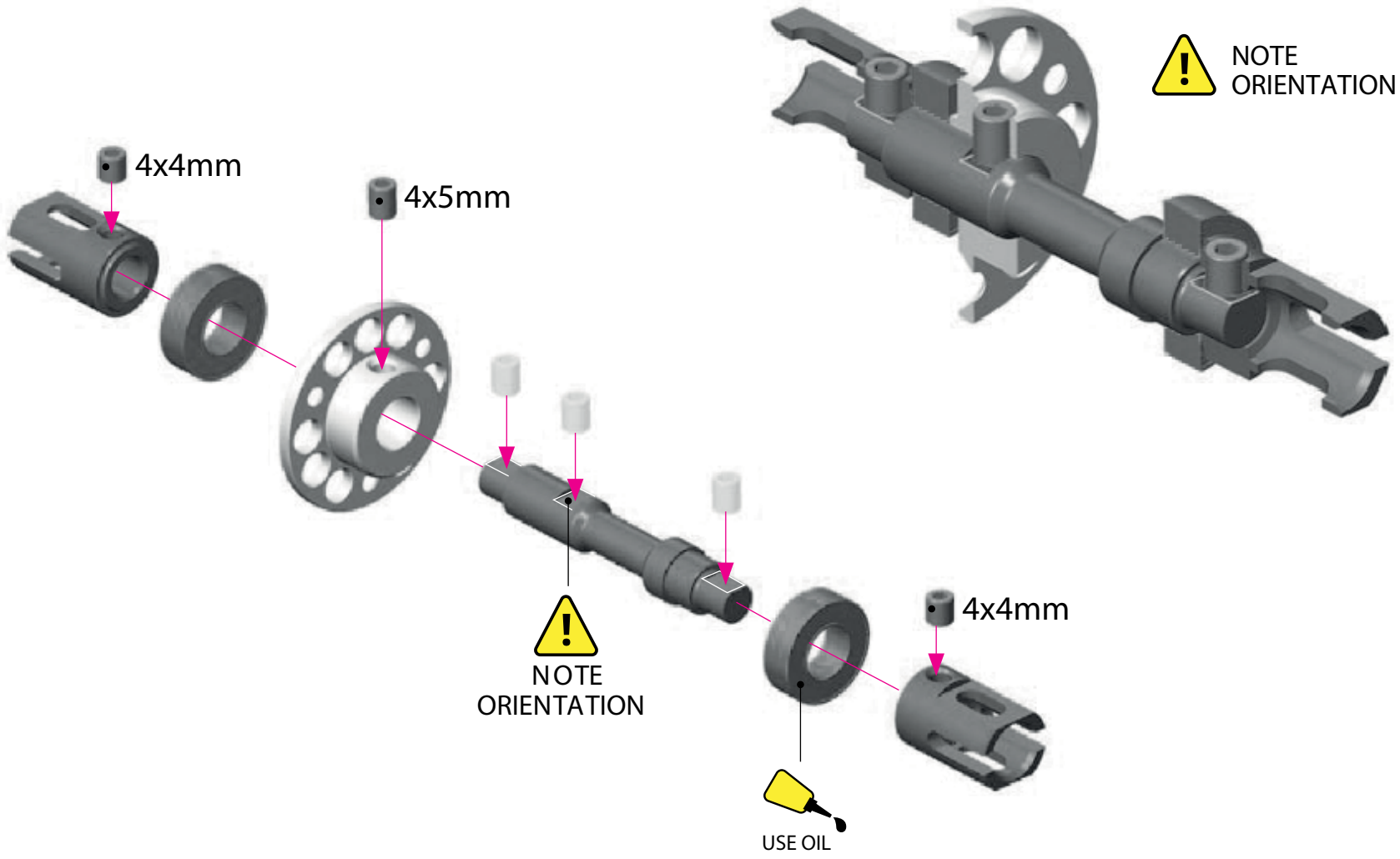
NOTE
ORIENTATION
4x4mm
4x5mm
NOTE
ORIENTATION
4x4mm
USE OIL

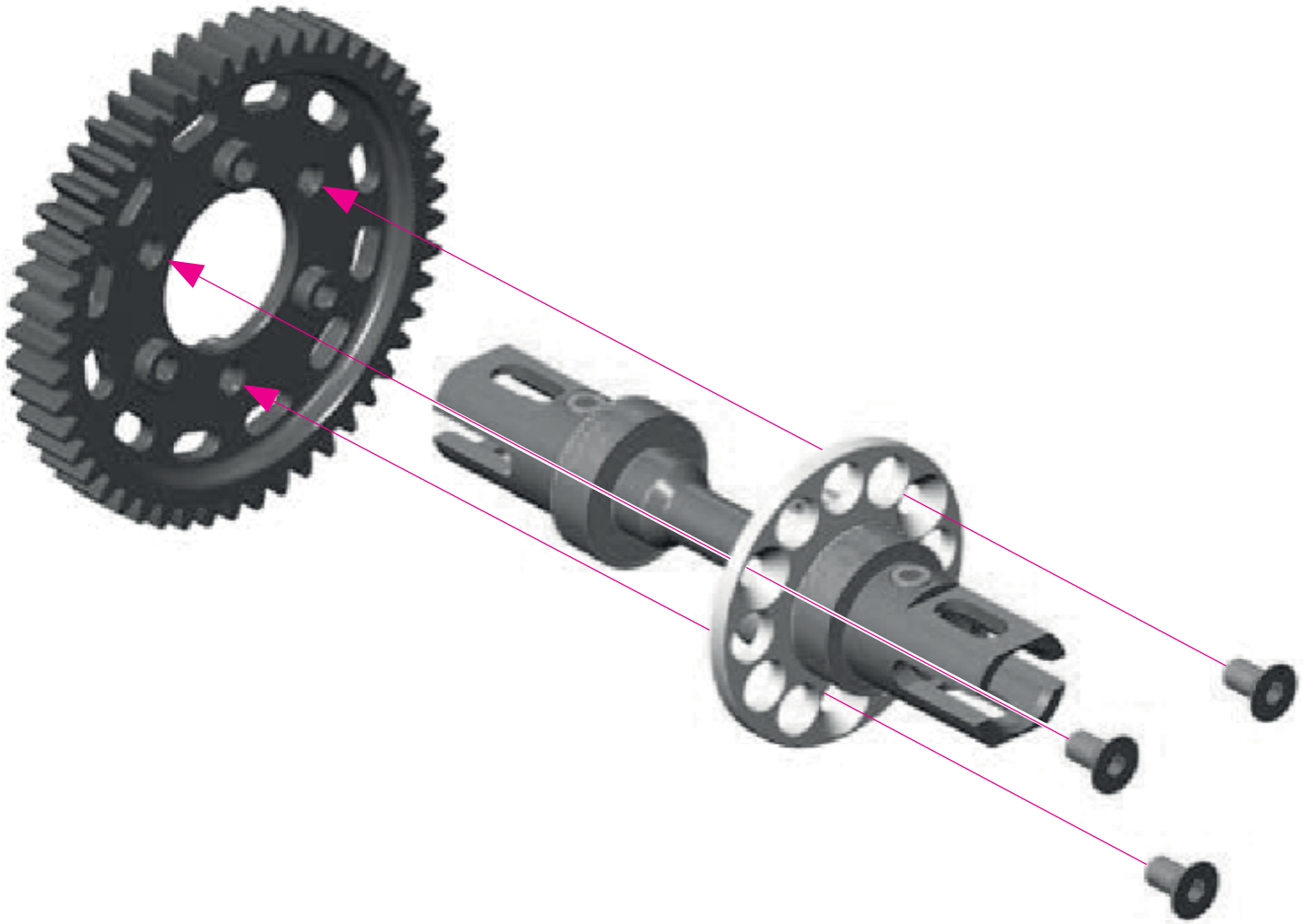

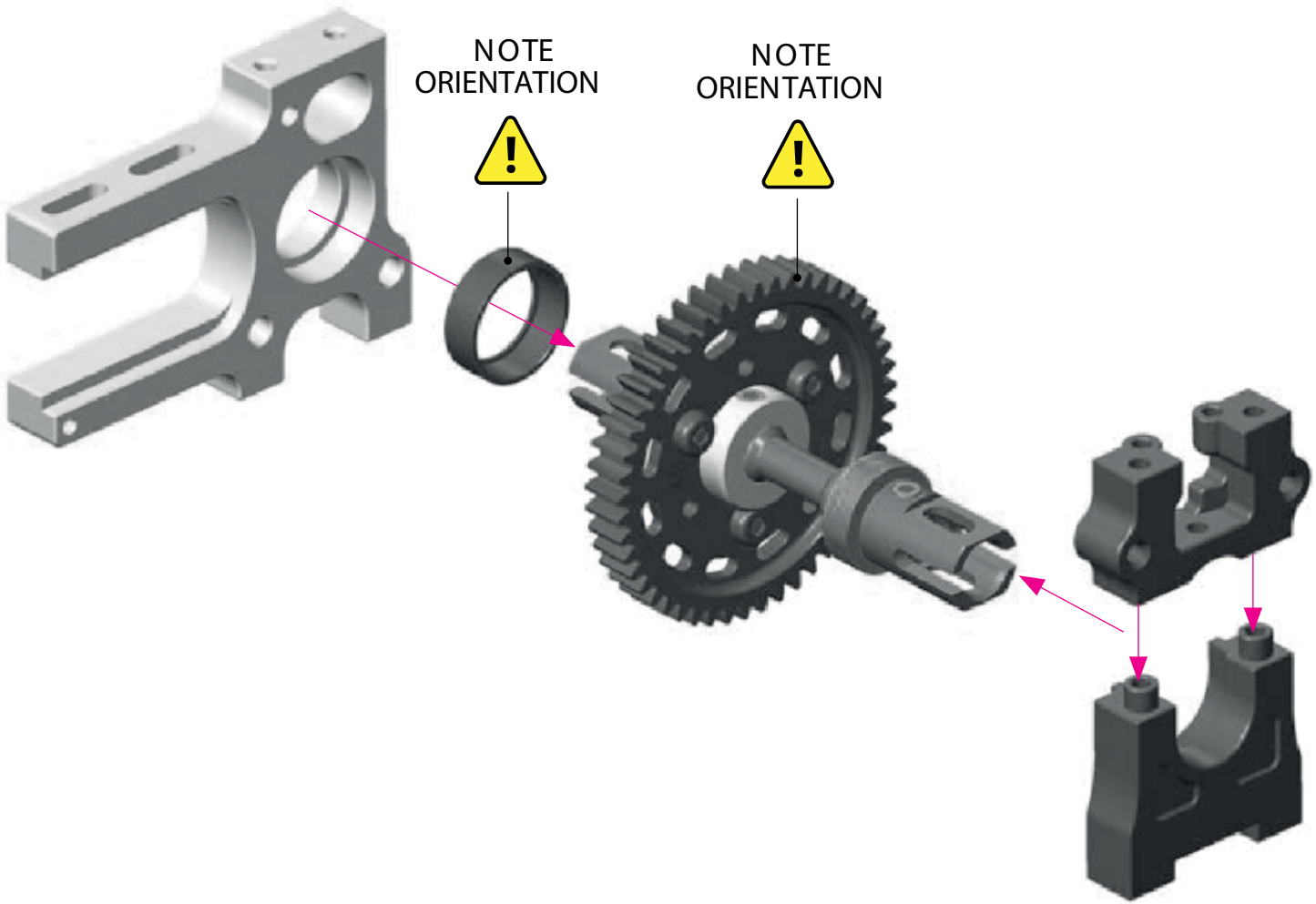
NOTE
ORIENTATION
NOTE
ORIENTATION

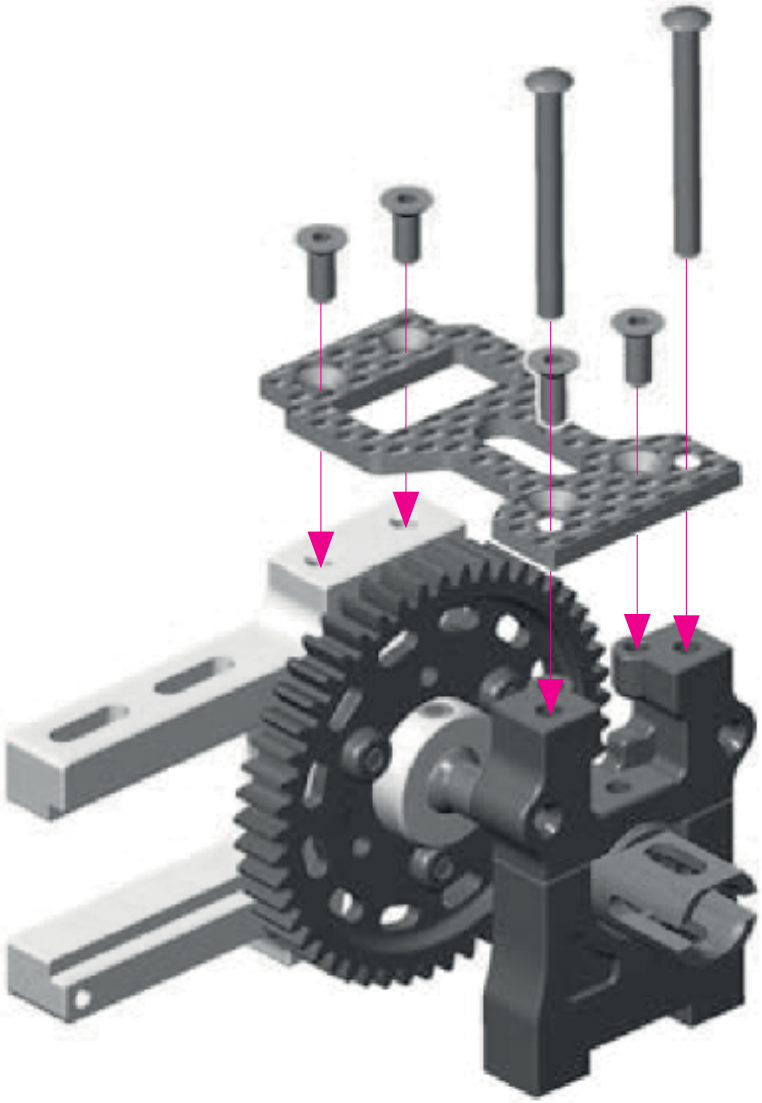

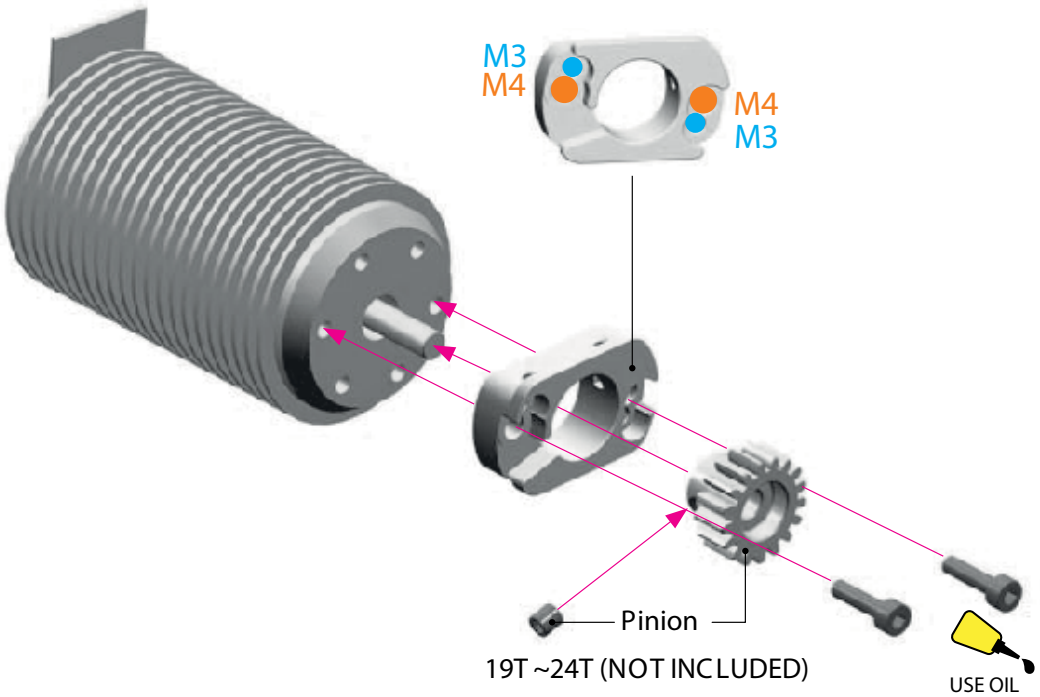

Use M3 or M4 screws which fit your motor.
(M4 INITIAL SETTING)

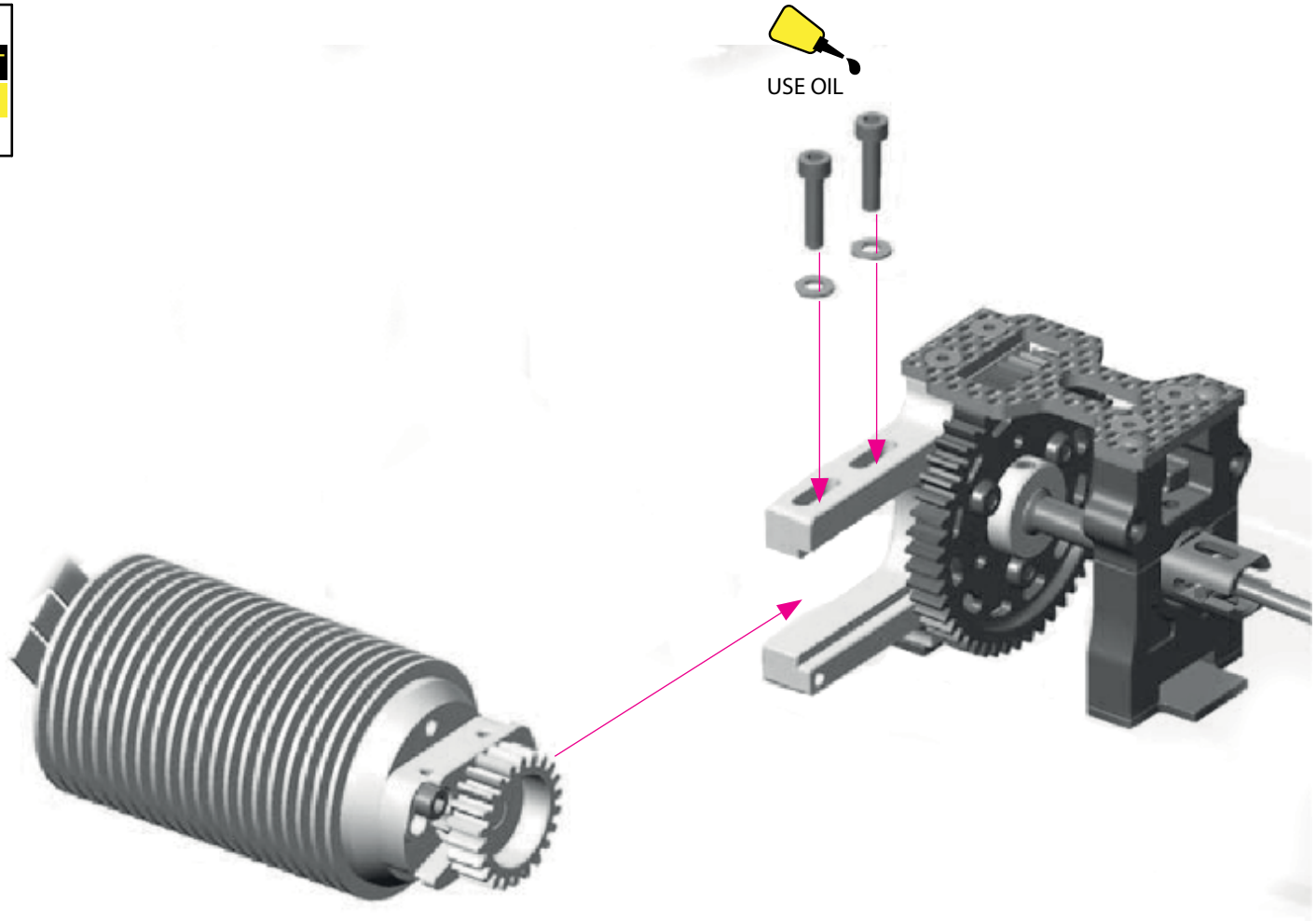

OPTIONAL	
COOLING FAN SUPPORT	
SINGLE	GT859010
DOUBLE	GT859015

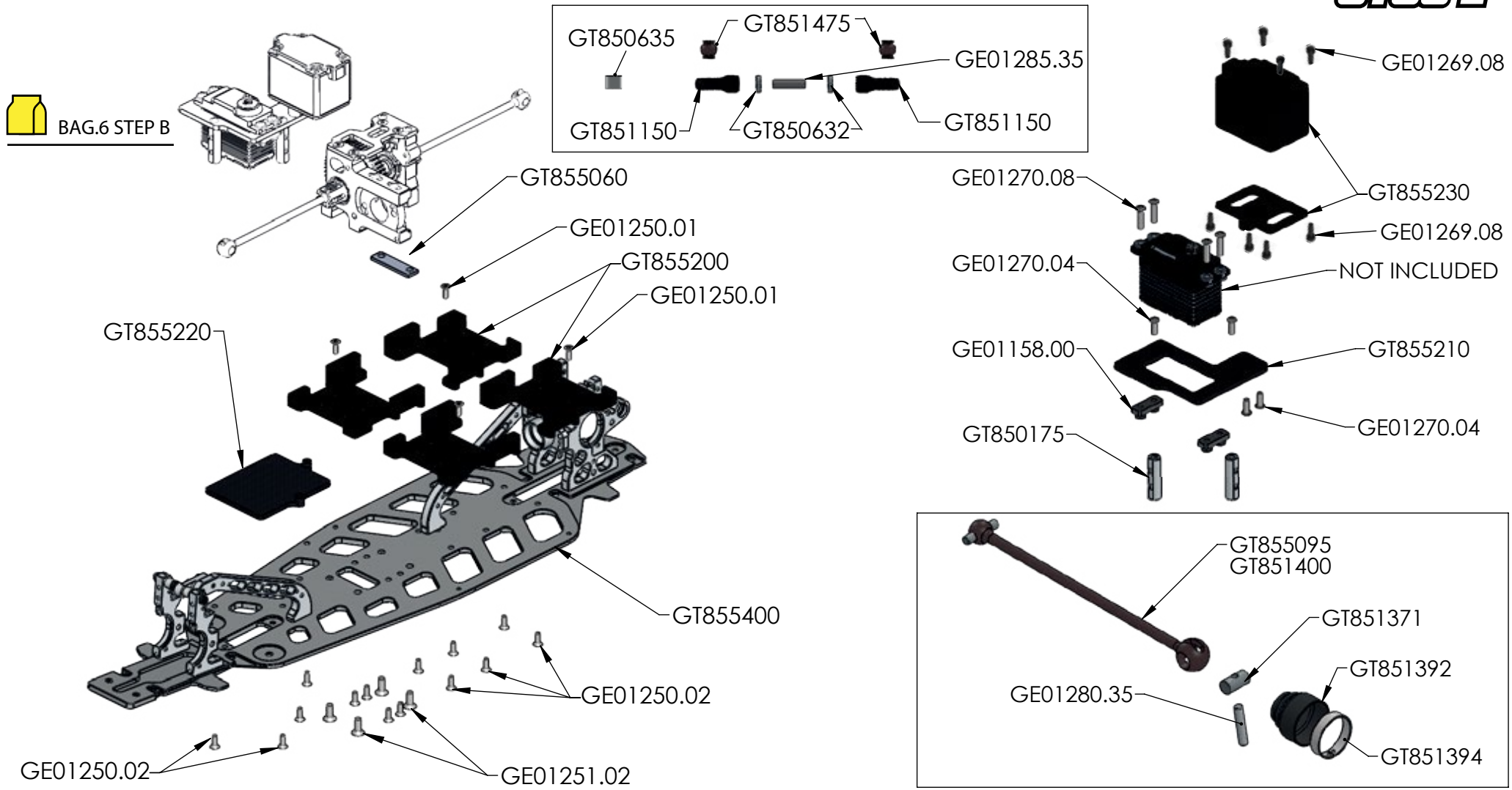
GENIUS
GTC8 E
BAG.6 STEP B
GT850635
GT851475
GE01285.35
GT851150
GT850632
GT851150
GE01269.08
GE01270.08
GT855230
GE01269.08
GE01270.04
NOT INCLUDED
GE01158.00
GT855210
GE01270.04
GT850175
GT855060
GE01250.01
GT855200
GE01250.01
GT855220
GT855400
GE01250.02
GE01250.02
GE01251.02
GT855095
GT851400
GT851371
GT851392
GE01280.35
GT851394

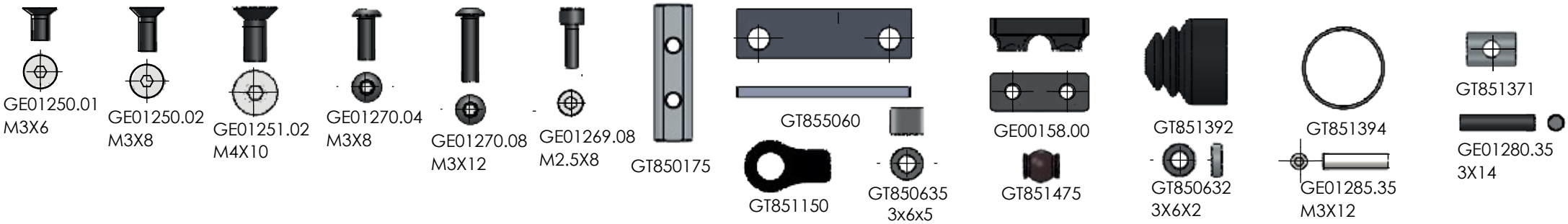
GE01250.01
M3X6
GE01250.02
M3X8
GE01251.02
M4X10
GE01270.04
M3X8
GE01270.08
M3X12
GE01269.08
M2.5X8
GT850175
GT855060
GT851150
GT850635
3x6x5
GE00158.00
GT851475
GT851392
GT850632
3X6X2
GT851394
GE01285.35
M3X12
GT851371
GE01280.35
3X14

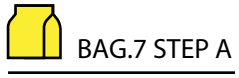

BAG.7 STEP A

OPTIONAL

GT850031
RACING BRAKE PADS

OPTIONAL

GT850251
RACING BRAKE DISC

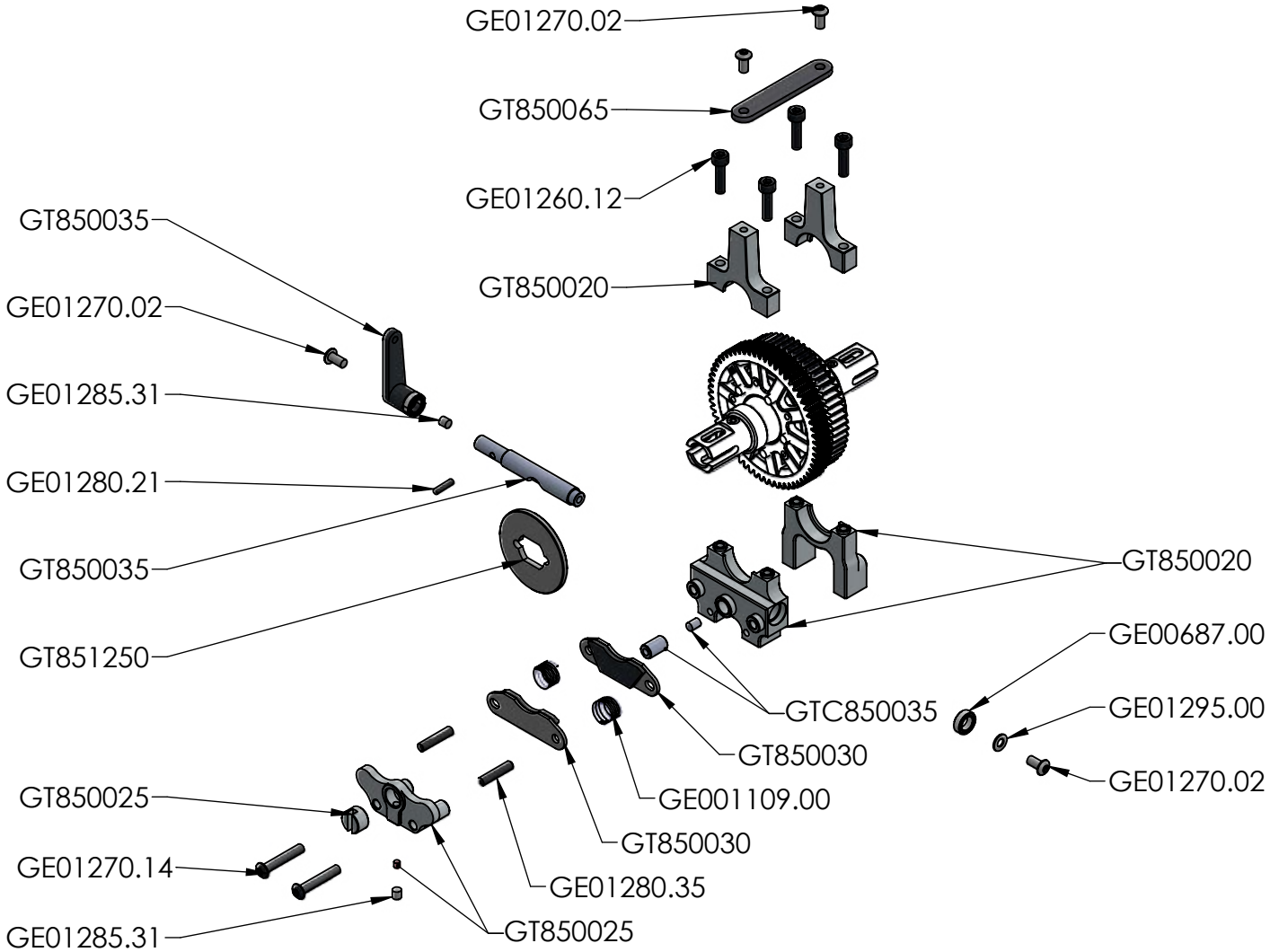

GE1270.02
M3X6

GE01260.12
M3X12

GE01270.14
M3X18

GE01285.31
M3X3

GT850025

GE01280.21
2X8

GE01280.35
3X14

GE01295.00
3X6X0.5

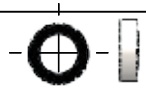

GE0687.00
5X8X2.5

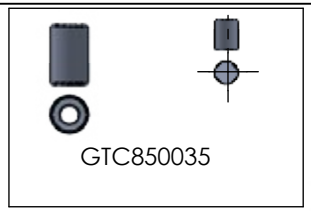

GTC850035

GE01109.00

GT850035

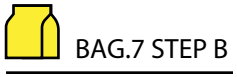

BAG.7 STEP B

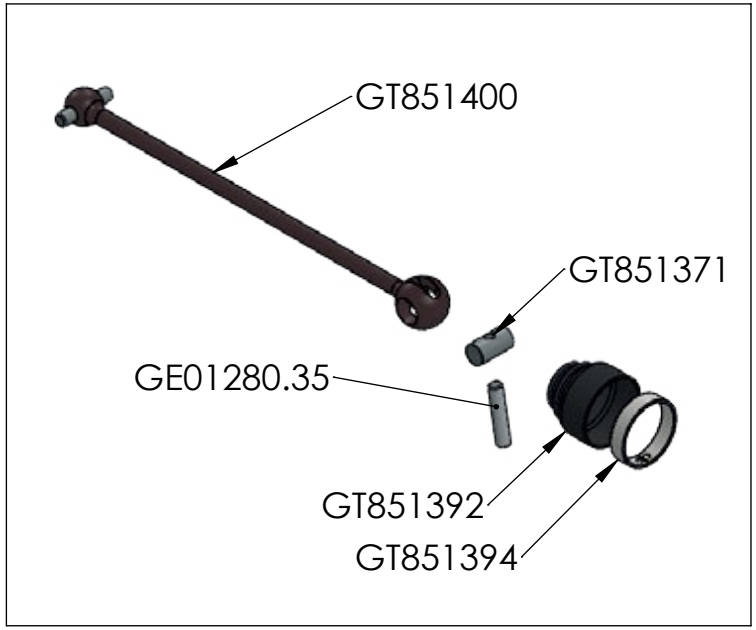

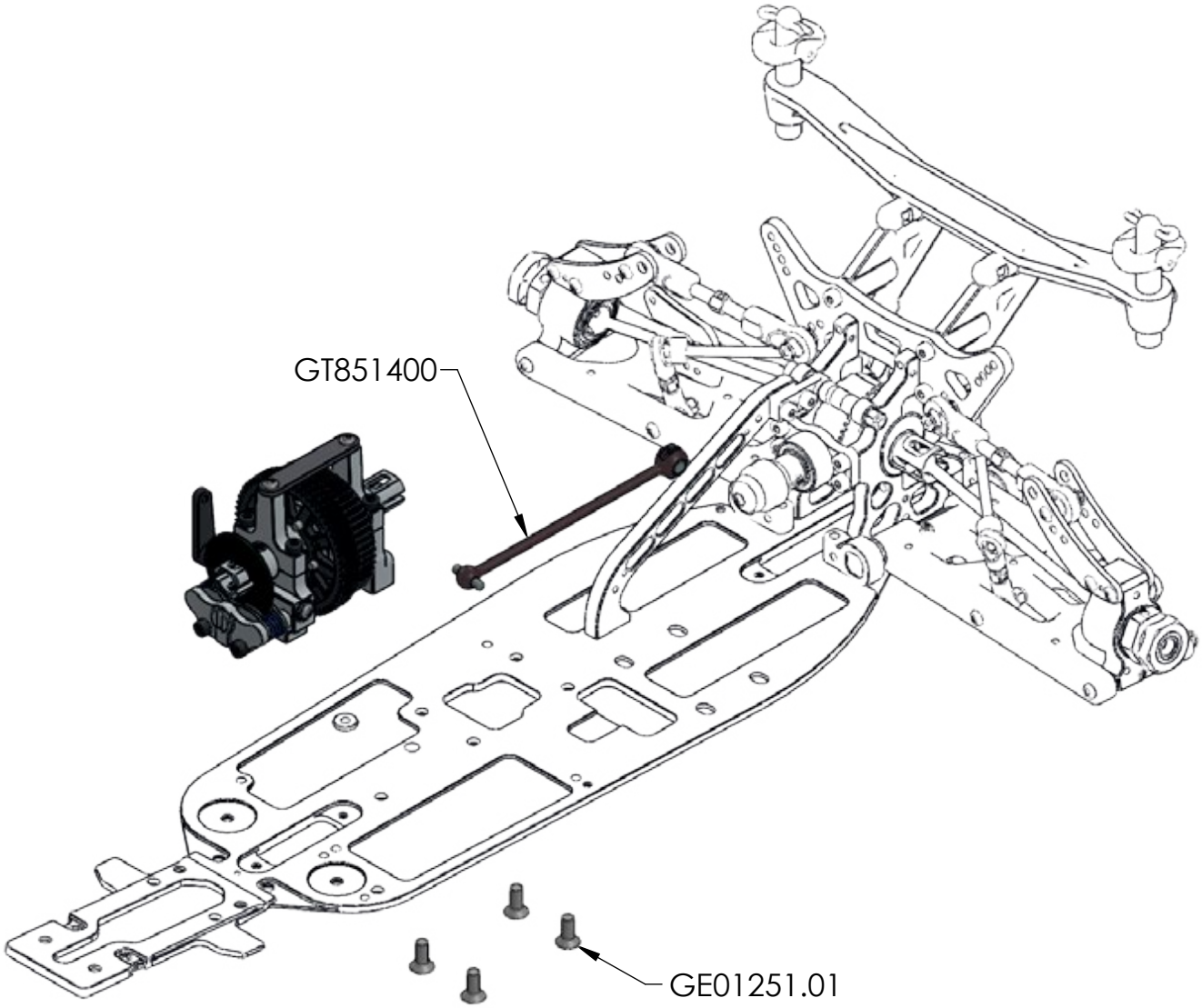

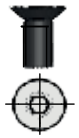

GE01251.01
M4X8

GT851400
86MM

GT851392

GT851394

GT851371

GE01280.35
3X14

BAG.8 STEP A

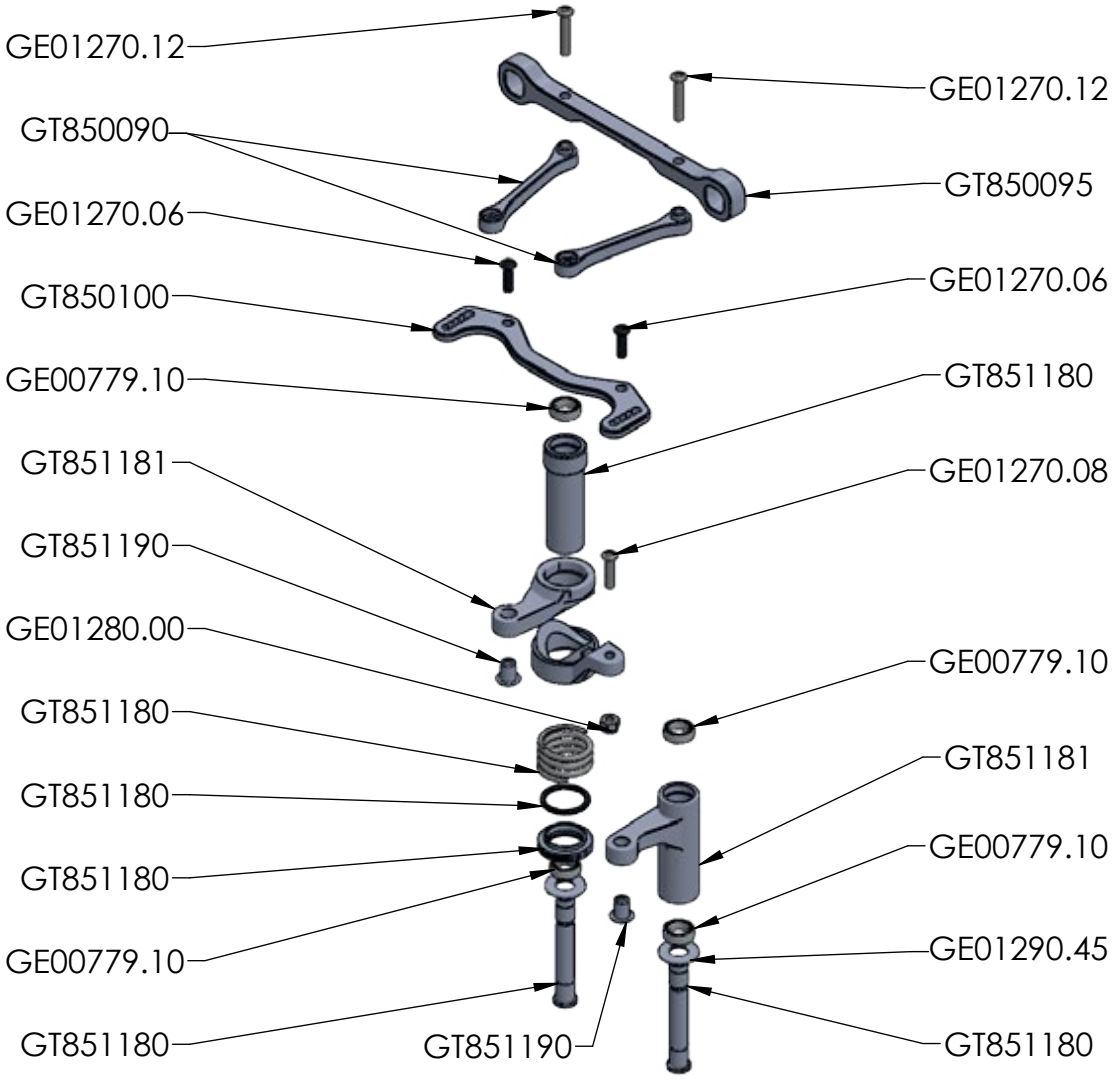
GE01270.12
GT850090
GE01270.06
GT850100
GE00779.10
GT851181
GT851190
GE01280.00
GT851180
GT851180
GT851180
GE00779.10
GT851180
GE01270.12
GT850095
GE01270.06
GT851180
GE01270.08
GE00779.10
GT851181
GE00779.10
GE01290.45
GT851180
GT851190

GE01270.06
M3X10
GE01270.12
M3X16
GE01280.00
M3 LOCK
GE01290.45
6X12X1
OR 12.1X1.6
GT851180
GE00779.10
6X10X3
GT851190
M3X12
GE01270.08
M3X12

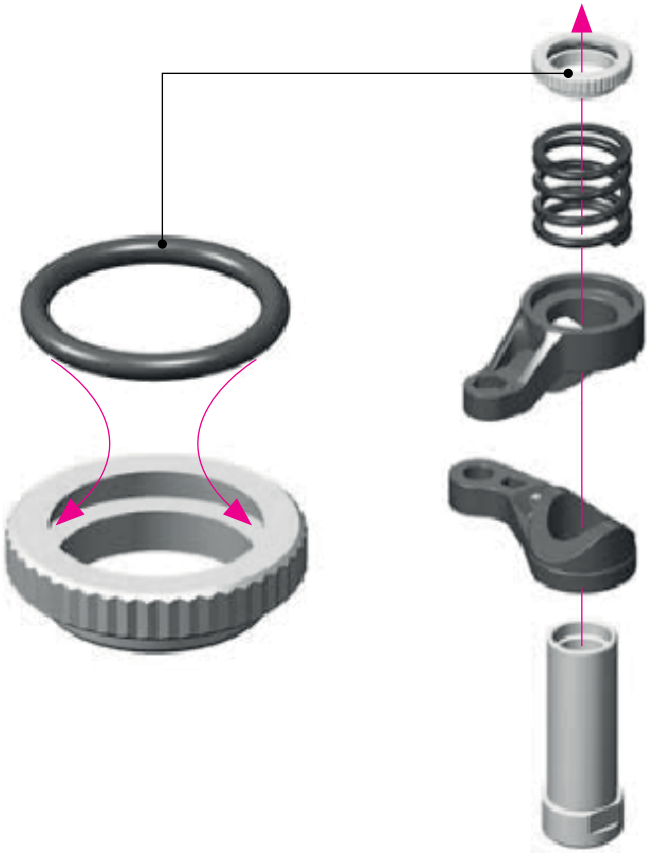

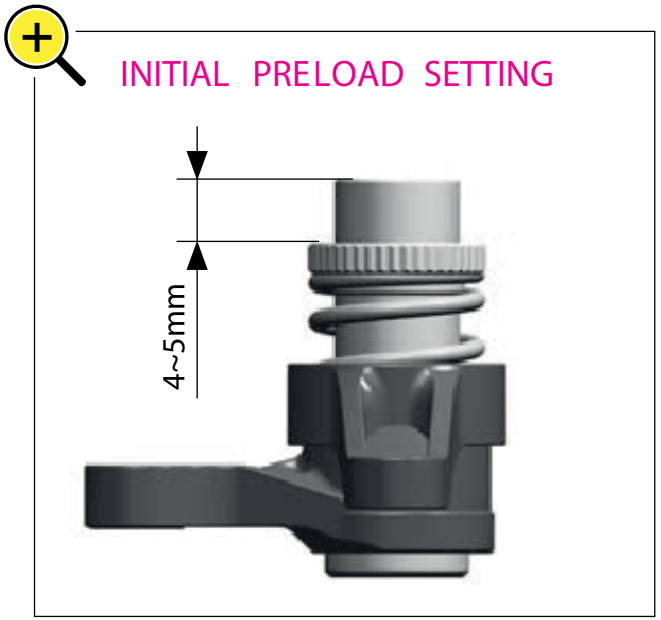
INITIAL PRELOAD SETTING
4~5mm

BAG.8 STEP B

GE01290.42
GE01290.44
GE01260.08
GT850055
GE01290.45
GE01280.20
GE01280.35
GE01285.41
GE01291.12
GT851390
GT850050
GE00778.05
GE01280.20
GT851342
GT850170
GT850050
GT850070
GE01260.14

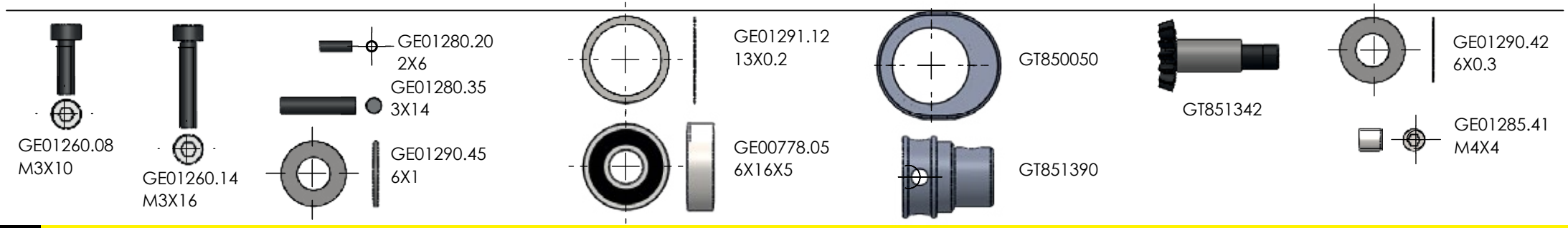

BAG.9 STEP A

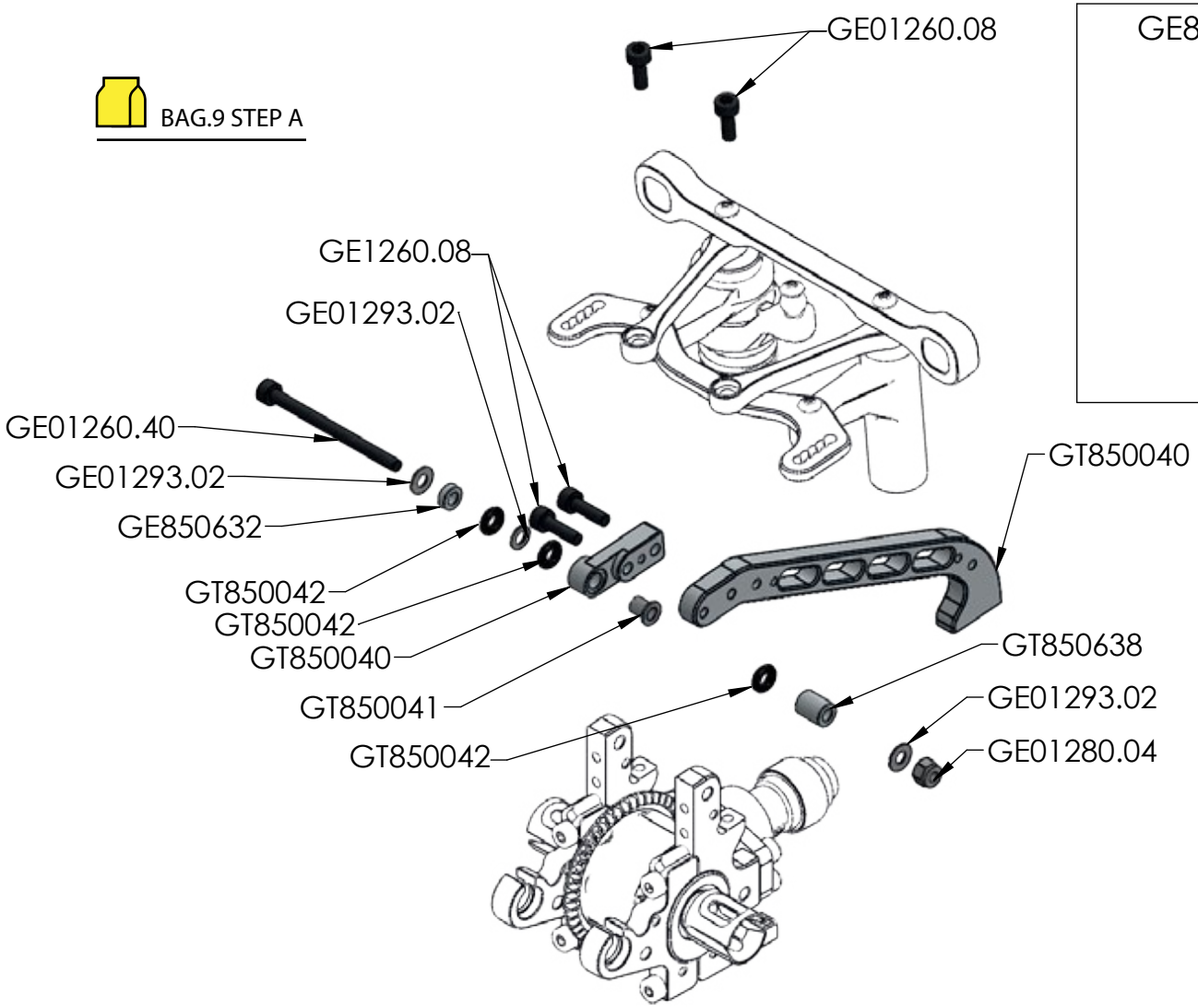
GE01260.08
GE1260.08
GE01293.02
GE01260.40
GE01293.02
GE850632
GT850042
GT850042
GT850040
GT850041
GT850042
GT850040
GT850638
GE01293.02
GE01280.04

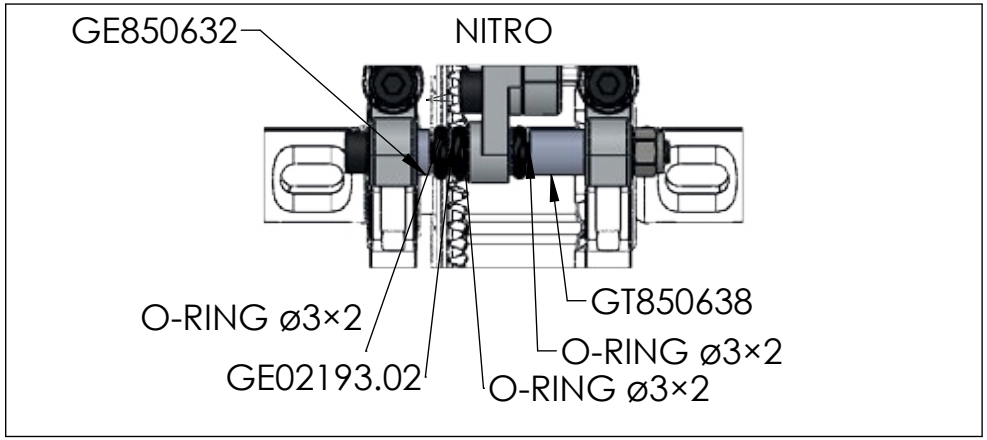
GE850632
NITRO
O-RING ø3×2
GE02193.02
GT850638
O-RING ø3×2
O-RING ø3×2

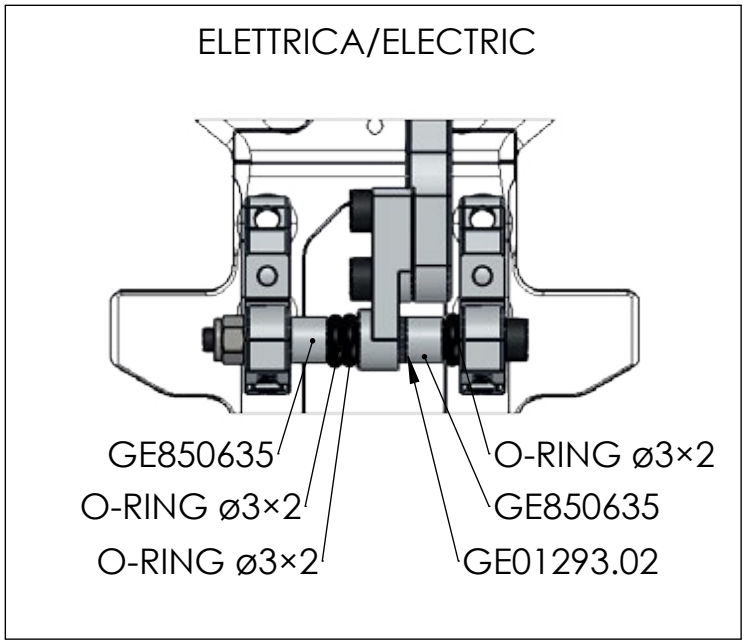
ELETTRICA/ELECTRIC
GE850635
O-RING ø3×2
O-RING ø3×2
O-RING ø3×2
GE850635
GE01293.02

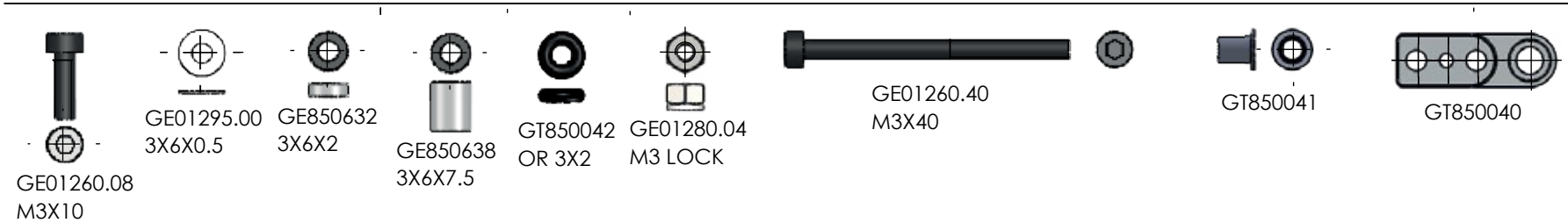
GE01260.08
M3X10
GE01295.00
3X6X0.5
GE850632
3X6X2
GE850638
3X6X7.5
GT850042
OR 3X2
GE01280.04
M3 LOCK
GE01260.40
M3X40
GT850041
GT850040

BAG.9 STEP B

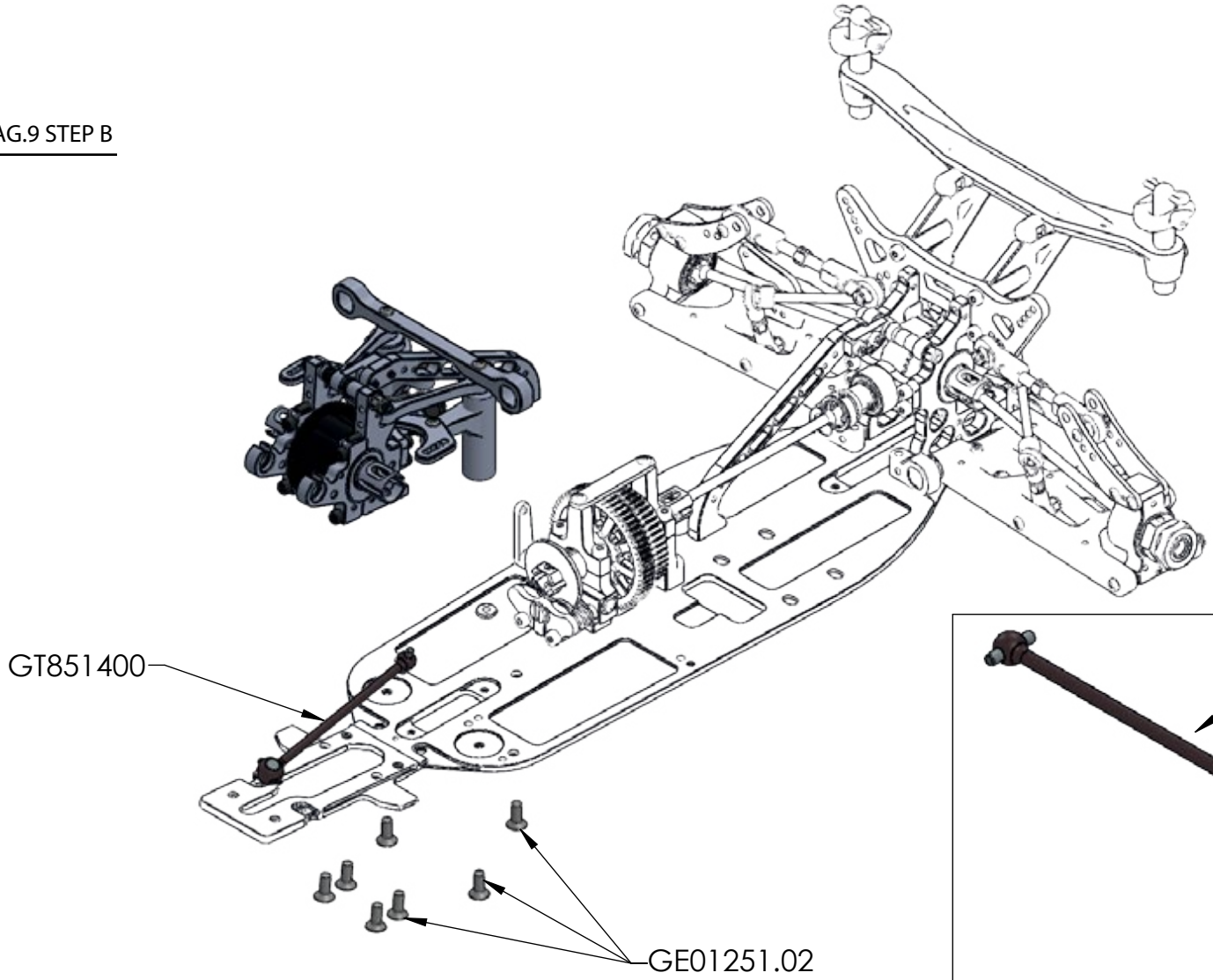

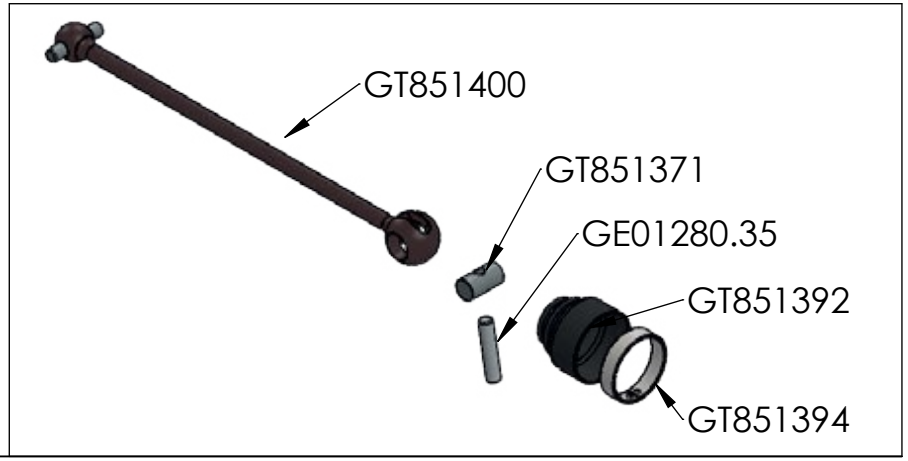

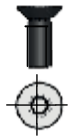

GE01251.02
M3X10

GT851400
86MM

GT851392

GT851394

GT851371

GE01280.35
3X14

BAG.10 STEP A

IMPORTANT:
NOTE ORIENTATION OF PART GT850075.
ATTENZIONE ALL'ORIENTAMENTO DEL PEZZO GT850075.

OPTIONAL
GT850205
M3-20MM

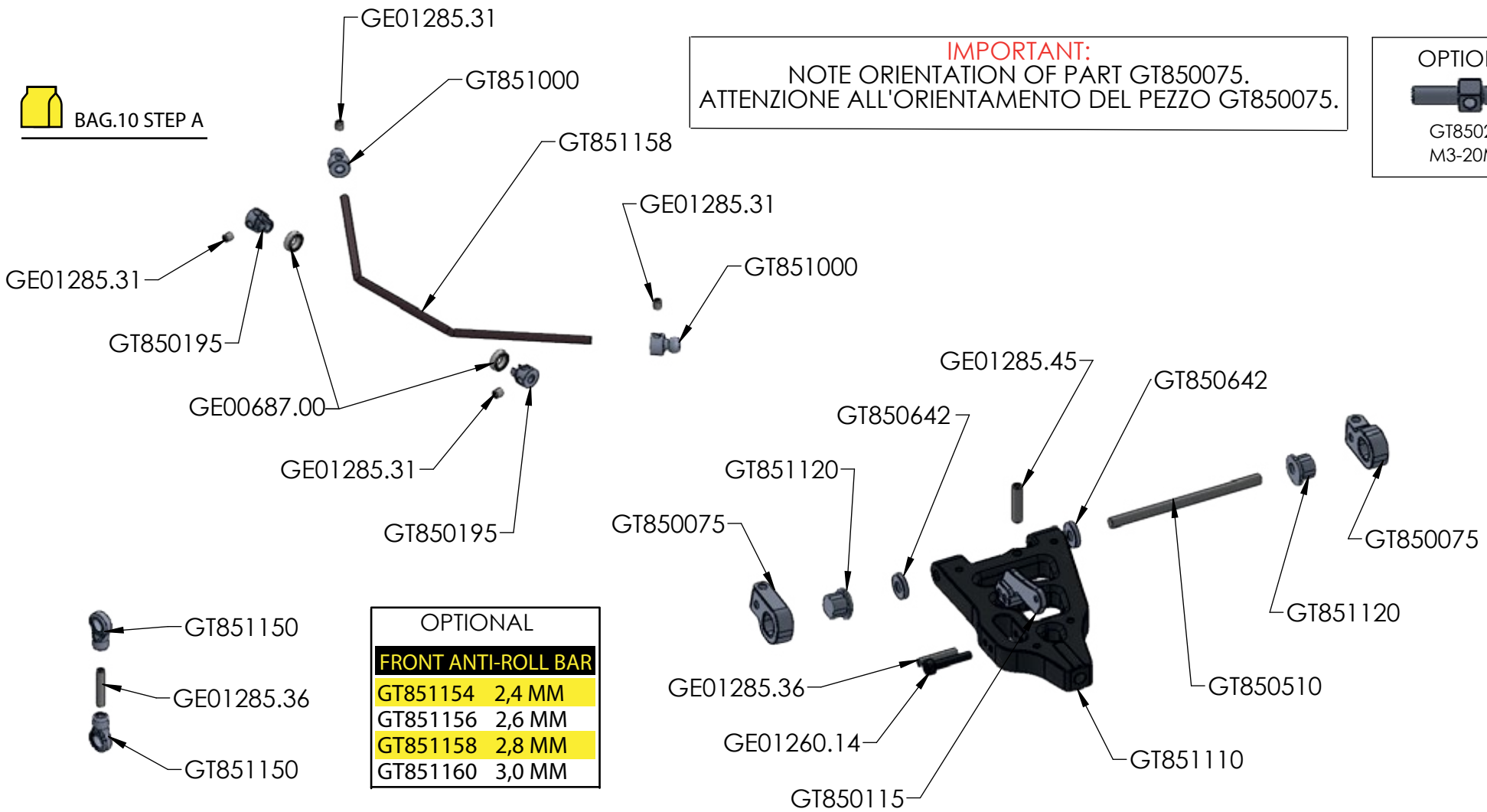

OPTIONAL

FRONT ANTI-ROLL BAR	
GT851154	2,4 MM
GT851156	2,6 MM
GT851158	2,8 MM
GT851160	3,0 MM

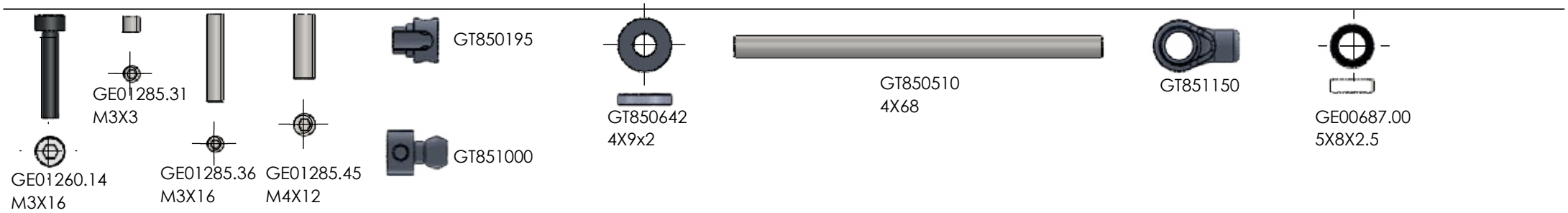

BAG.10 STEP B

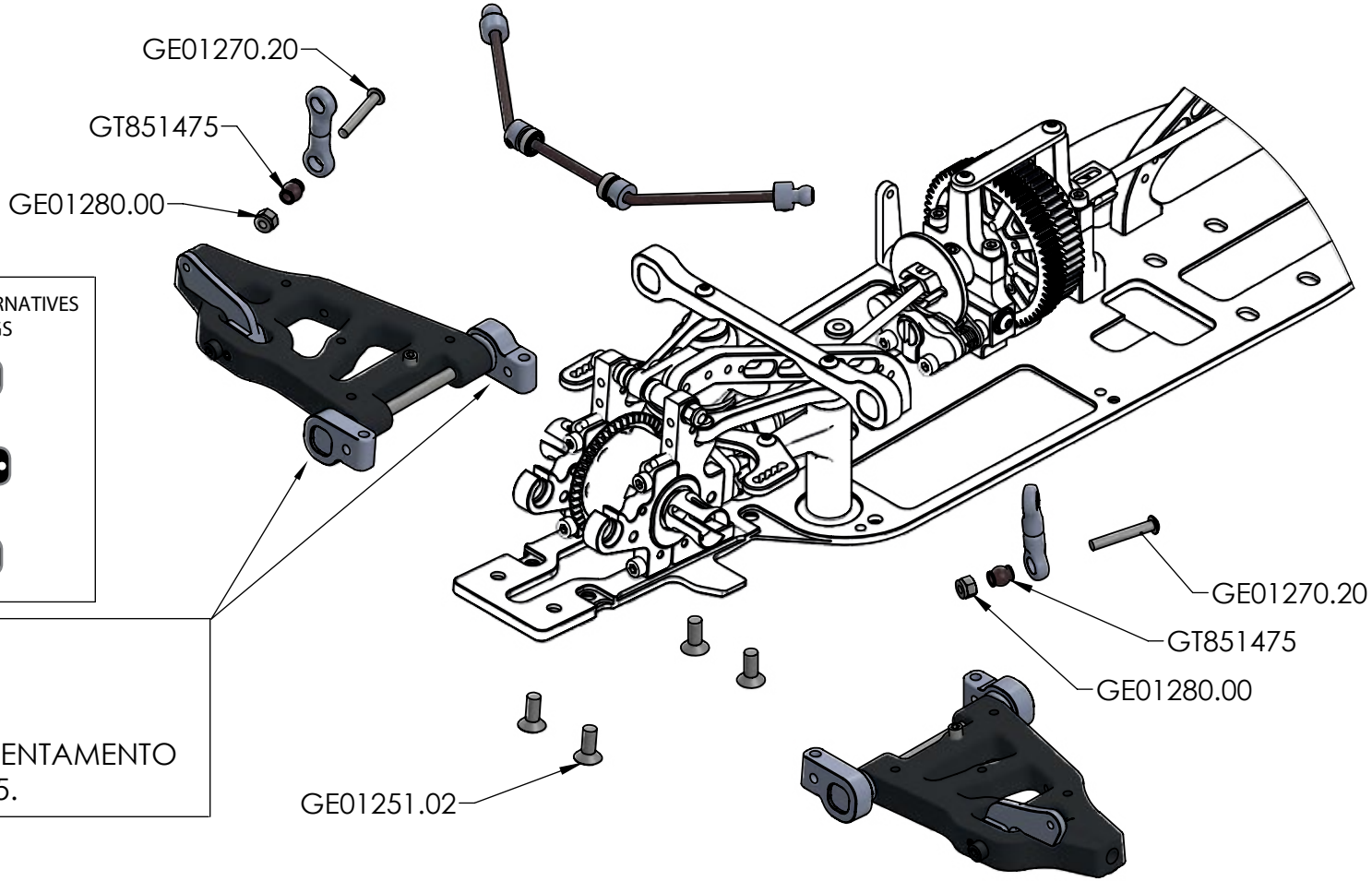

ALL POSSIBLE MOUNTING ALTERNATIVES OF ECCENTRIC BUSHINGS

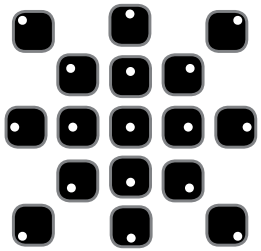

IMPORTANT:
NOTE ORIENTATION OF PART GT850075.
ATTENZIONE ALL'ORIENTAMENTO DEL PEZZO GT850075.

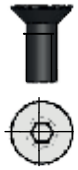

GE01251.02
M4X10

GE01270.20
M3X20

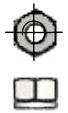

GE01280.00
M3 LOCK

GT851475

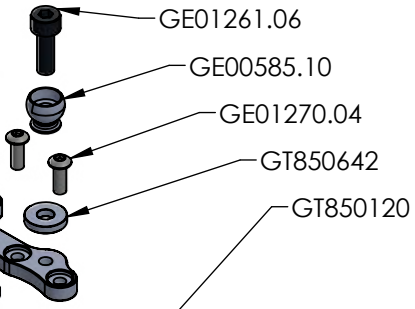

BAG.11 STEP A

GE01261.06
GE00585.10
GE01270.04
GT850642
GT850120
GT850155
GT850632
GT851209
GE01260.14
GE01280.20
GE01270.06
GE00778.02
GE01280.36
GT851382
GE01285.51
GT851386
GE00566.00
GT851420
GT851430
GT851410
GT850105
GE00778.04
GT851350
GE01280.28
GT851370
GT851360

STANDARD	OPTIONAL
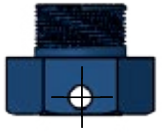	
GT851382 +2MM	GT851381 +1MM

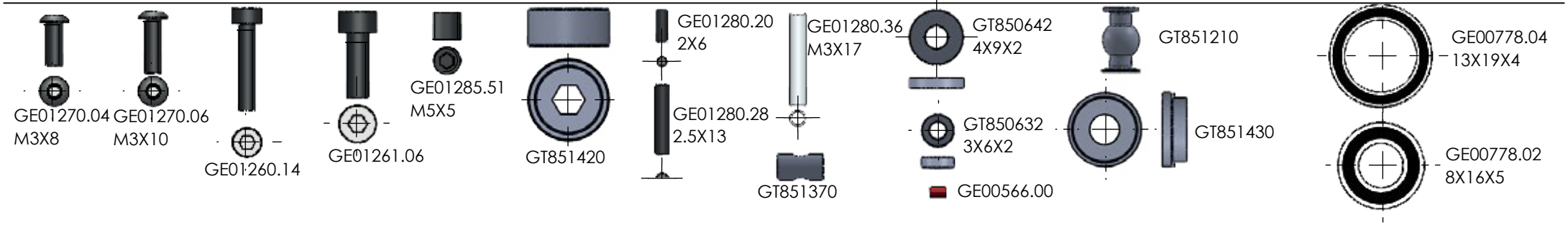

BAG.11 STEP B

OPTIONAL

GT851570
GE01280.22
GE00211.10
GT851100

OPTIONAL

GT850316
M5 TITANIUM

29

GE01270.06
GT851210
GE00756.00
GT851200
GT851230

GE01285.31
GE01260.08
GE01270.04
GT850085
GT851120
GT850520
GT851120

GT851130
GT850125
GT850135
GT850145

ALL POSSIBLE MOUNTING ALTERNATIVES OF ECCENTRIC BUSHINGS

GE01270.04
M3X8

GE01270.06
M3X10

GE01260.08
M3X10

GT851210

GT851570

GT850520
4X58

GE01280.22
2X10

GE01285.31
M3X3

GT850145

GT851200
53 MM

GT850135
M5

GT851230

GE00756.00

GENIUS

GTC8 + GTC8 E

GT851505
GE00708.04
GT851500
GT851520
GE01270.04
GT857140
GE00715.02
GE01290.34
GE00715.02
GE00715.07
GT851474
GE00583.04
GT857100
GT857120
GT857110
BAG.12
GE00708.00
GE00709.02
GE00713.02
GT858050
GT851472

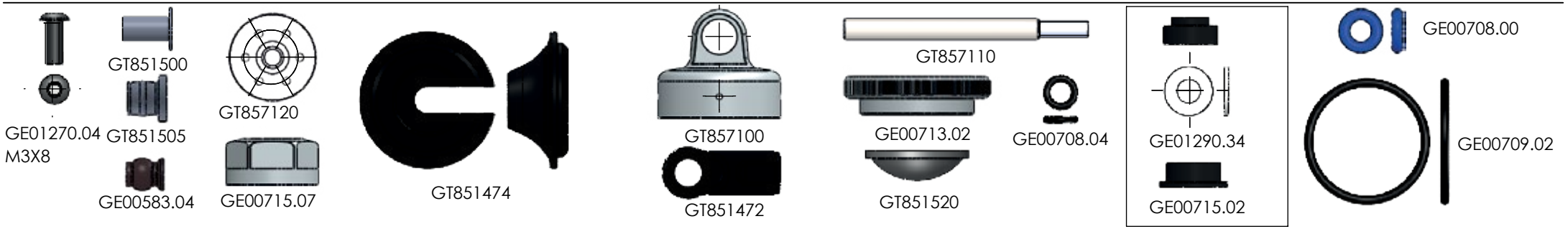

SPRING

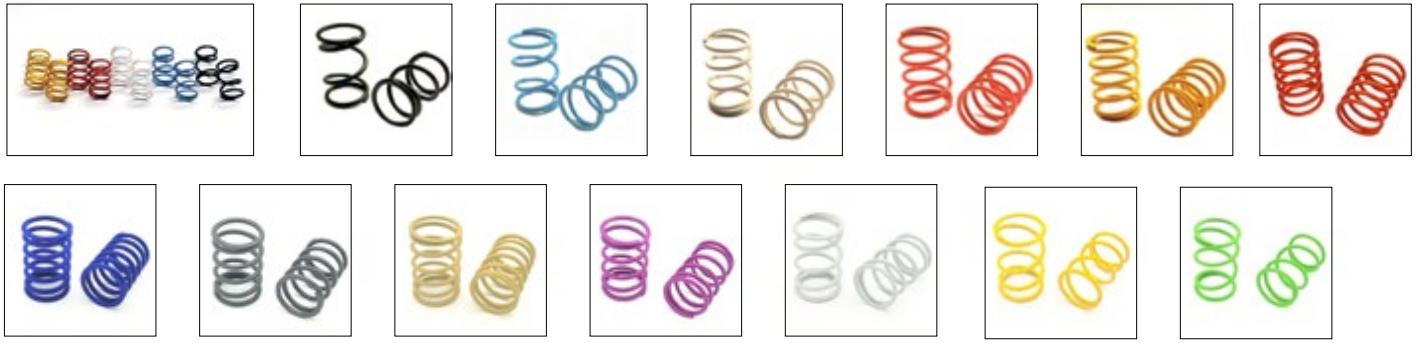

GT858000	SHOCK SPRINGS SET.....	(10)
GT858040	SHOCK SPRINGS BLACK.....	4.0 COILS - HARD (2)
GT858045	SHOCK SPRINGS BLUE.....	4.5 COILS - MEDIUM/HARD (2)
GT858050	SHOCK SPRINGS WHITE.....	5.0 COILS - MEDIUM (2)
GT858055	SHOCK SPRINGS RED.....	5.5 COILS - MEDIUM/SOFT (2)
GT858060	SHOCK SPRINGS YELLOW.....	6.0 COILS - SOFT (2)
GT858065	SHOCK SPRINGS ORANGE.....	6.5 COILS - SUPER SOFT (2)
GT858070	SHOCK SPRINGS - Linear - DARK BLUE (2)	
GT858075	SHOCK SPRINGS - Linear - DARK GRAY (2)	
GT858080	SHOCK SPRINGS - Progressive - GOLD (2)	
GT858085	SHOCK SPRINGS - Progressive - PURPLE (2)	
GT858090	SHOCK SPRINGS - Progressive - SILVER (2)	
GT858095	SHOCK SPRINGS - Progressive - OCRA (2)	
GT858100	SHOCK SPRINGS - Progressive - GREEN FLUO (2)	

SILICONE OIL

GE04000.30	SILICONE OIL 300CST.....60ML
GE04000.40	SILICONE OIL 400CST.....60ML
GE04000.50	SILICONE OIL 500CST.....60ML
GE04000.60	SILICONE OIL 600CST.....60ML
GE04000.70	SILICONE OIL 700CST.....60ML
GE04000.80	SILICONE OIL 800CST.....60ML
GE04001.00	SILICONE OIL 1.000CST.....60ML
GE04002.00	SILICONE OIL 2.000CST.....60ML
GE04003.00	SILICONE OIL 3.000CST.....60ML
GE04004.00	SILICONE OIL 4.000CST.....60ML
GE04005.00	SILICONE OIL 5.000CST.....60ML
GE04006.00	SILICONE OIL 6.000CST.....60ML
GE04007.00	SILICONE OIL 7.000CST.....60ML
GE04008.00	SILICONE OIL 8.000CST 60ML
GE04009.00	SILICONE OIL 9.000CST 60ML
GE04010.00	SILICONE OIL 10.000CST 60ML
GE04020.00	SILICONE OIL 20.000CST 60ML
GE04030.00	SILICONE OIL 30.000CST 60ML
GE04050.00	SILICONE OIL 50.000CST 60ML
GE04060.00	SILICONE OIL 60.000CST 60ML
GE04100.00	SILICONE OIL 100.000CST.....60ML
GE04200.00	SILICONE OIL 200.000CST.....60ML
GE04300.00	SILICONE OIL 300.000CST.....60ML
GE04500.00	SILICONE OIL 500.000CST.....60ML
GE04990.00	SILICONE OIL 1.000.000CST...60ML

BAG.13

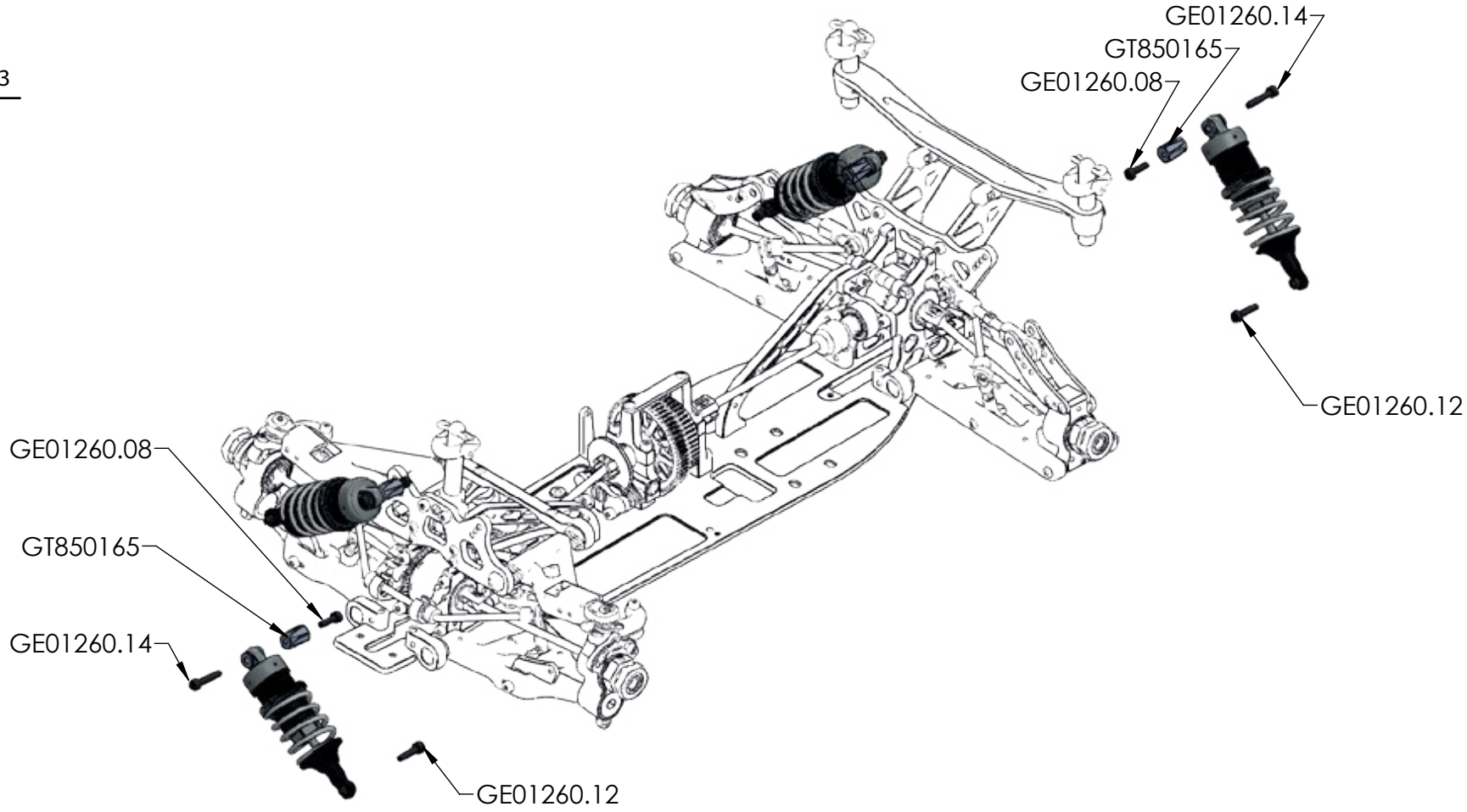
GE01260.14
GT850165
GE01260.08
GE01260.12
GE01260.08
GT850165
GE01260.14
GE01260.12

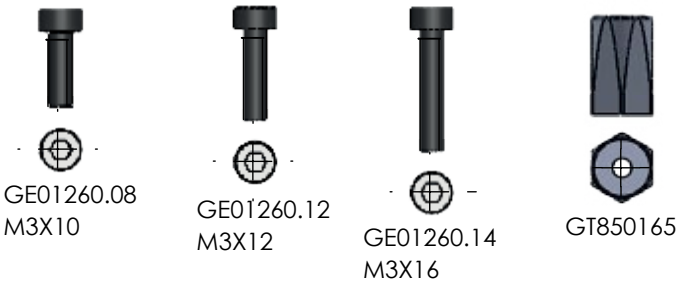
GE01260.08
M3X10
GE01260.12
M3X12
GE01260.14
M3X16
GT850165

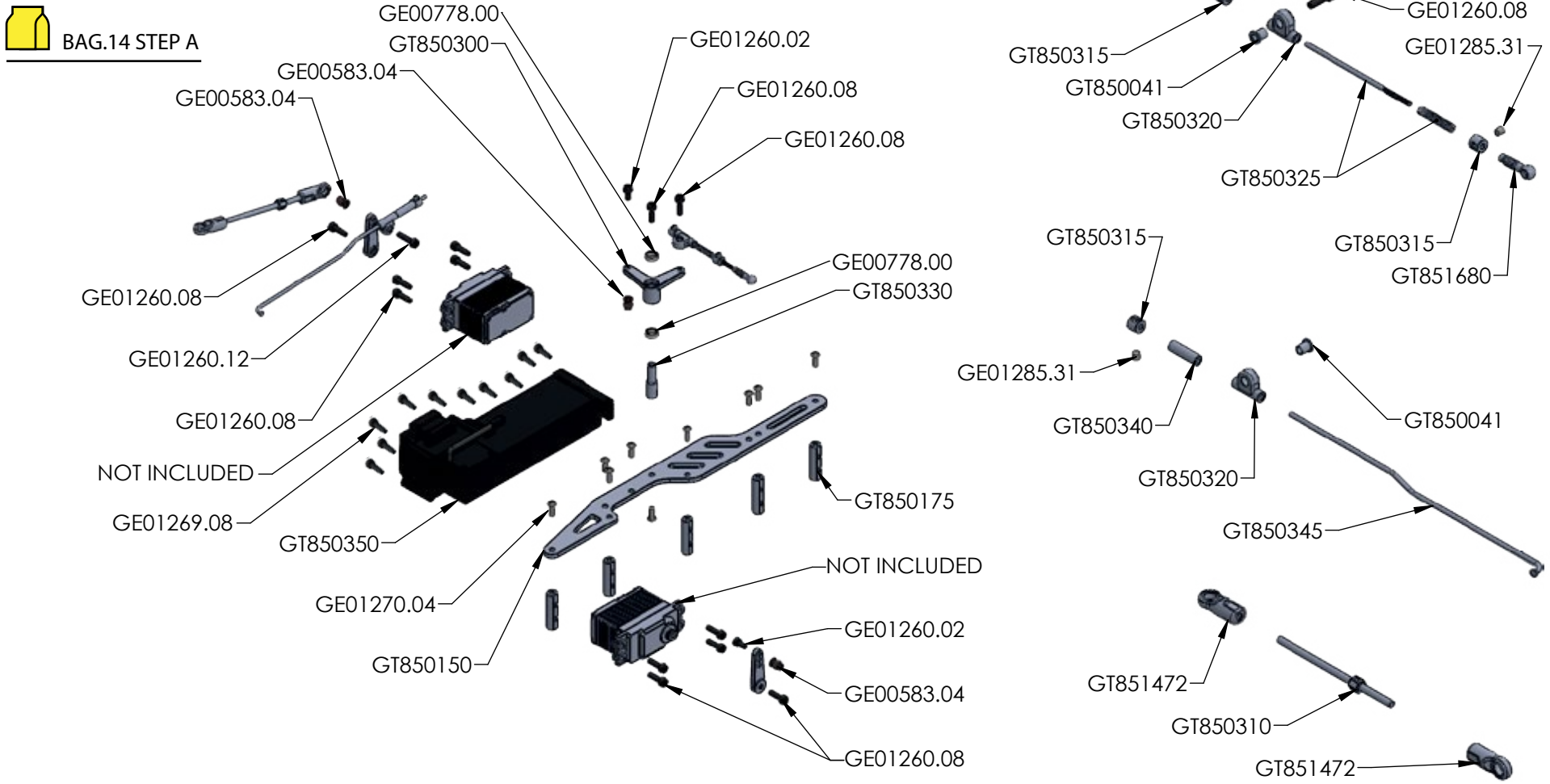
BAG.14 STEP A
GE00778.00
GT850300
GE00583.04
GE00583.04
GE01260.02
GE01260.08
GE01260.08
GE01260.08
GE01260.12
GE01260.08
NOT INCLUDED
GE01269.08
GT850350
GE01270.04
GT850150
GE00778.00
GT850330
GT850175
NOT INCLUDED
GE01260.02
GE00583.04
GE01260.08
GE01285.31
GE01260.08
GT850315
GE01285.31
GT850041
GT850320
GT850325
GT850315
GT850315
GT851680
GE01285.31
GT850340
GT850041
GT850320
GT850345
GT851472
GT850310
GT851472

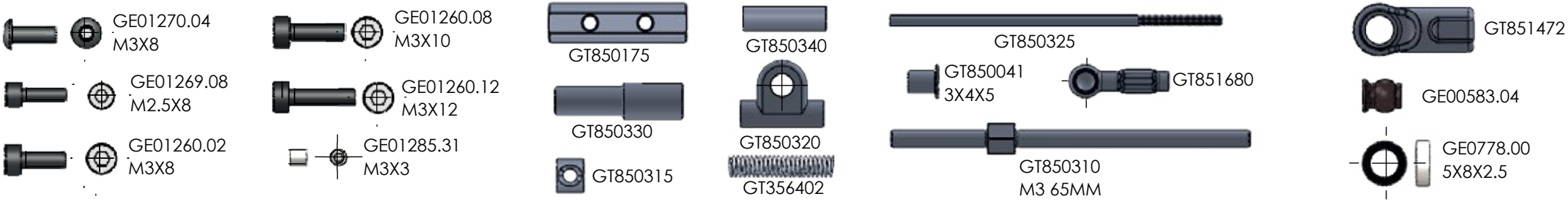
GE01270.04
M3X8
GE01269.08
M2.5X8
GE01260.02
M3X8
GE01260.08
M3X10
GE01260.12
M3X12
GE01285.31
M3X3
GT850175
GT850330
GT850315
GT850340
GT850320
GT356402
GT850325
GT850041
3X4X5
GT851680
GT850310
M3 65MM
GT851472
GE00583.04
GE0778.00
5X8X2.5

BAG.14 STEP B

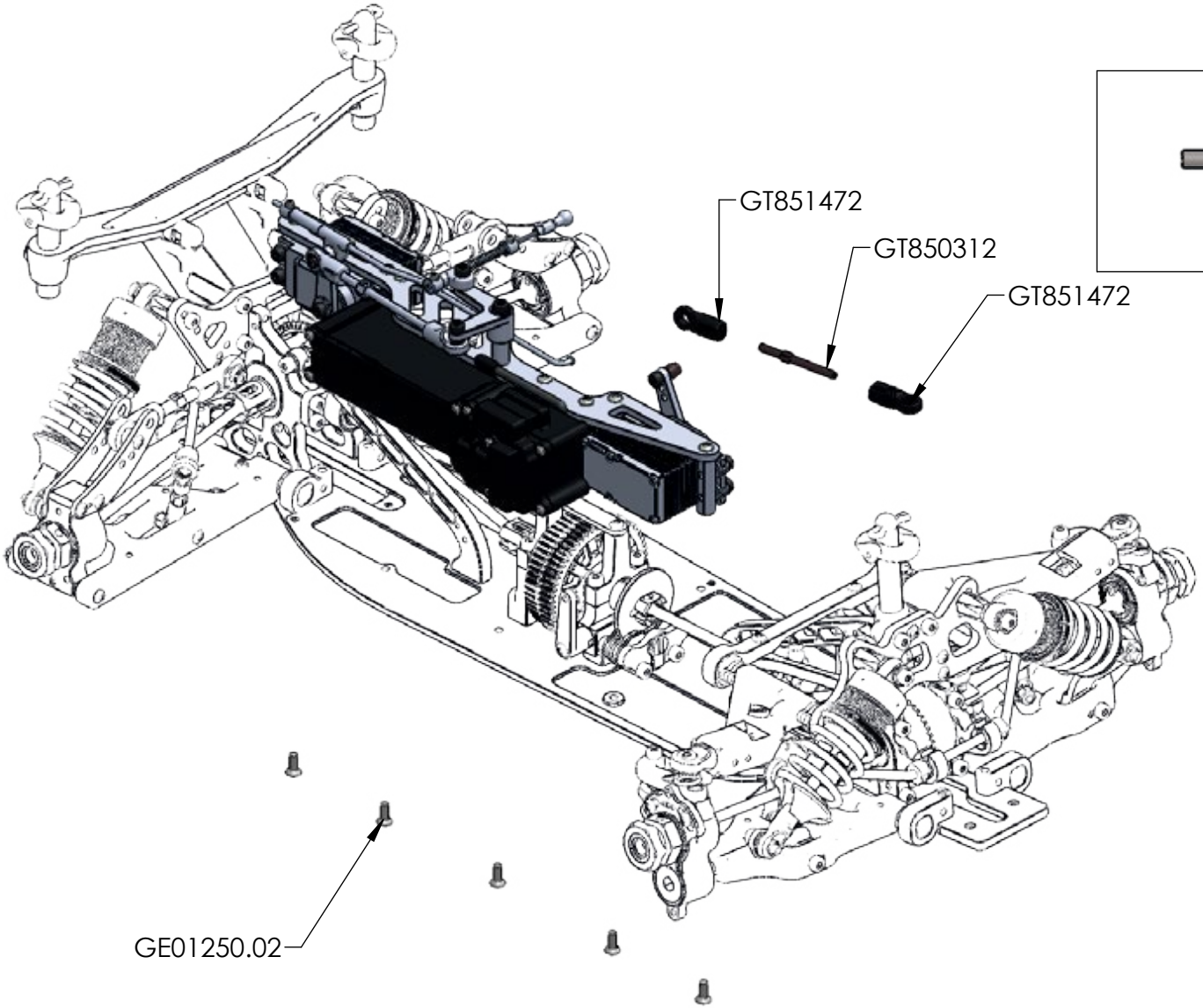

OPTIONAL

GT850313
M3-35MM TITANIUM

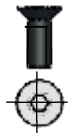

GE01250.02
M3X8

GT850312
M3-35MM

GT851472

BAG.15

Art. GT851800 CLUTCH

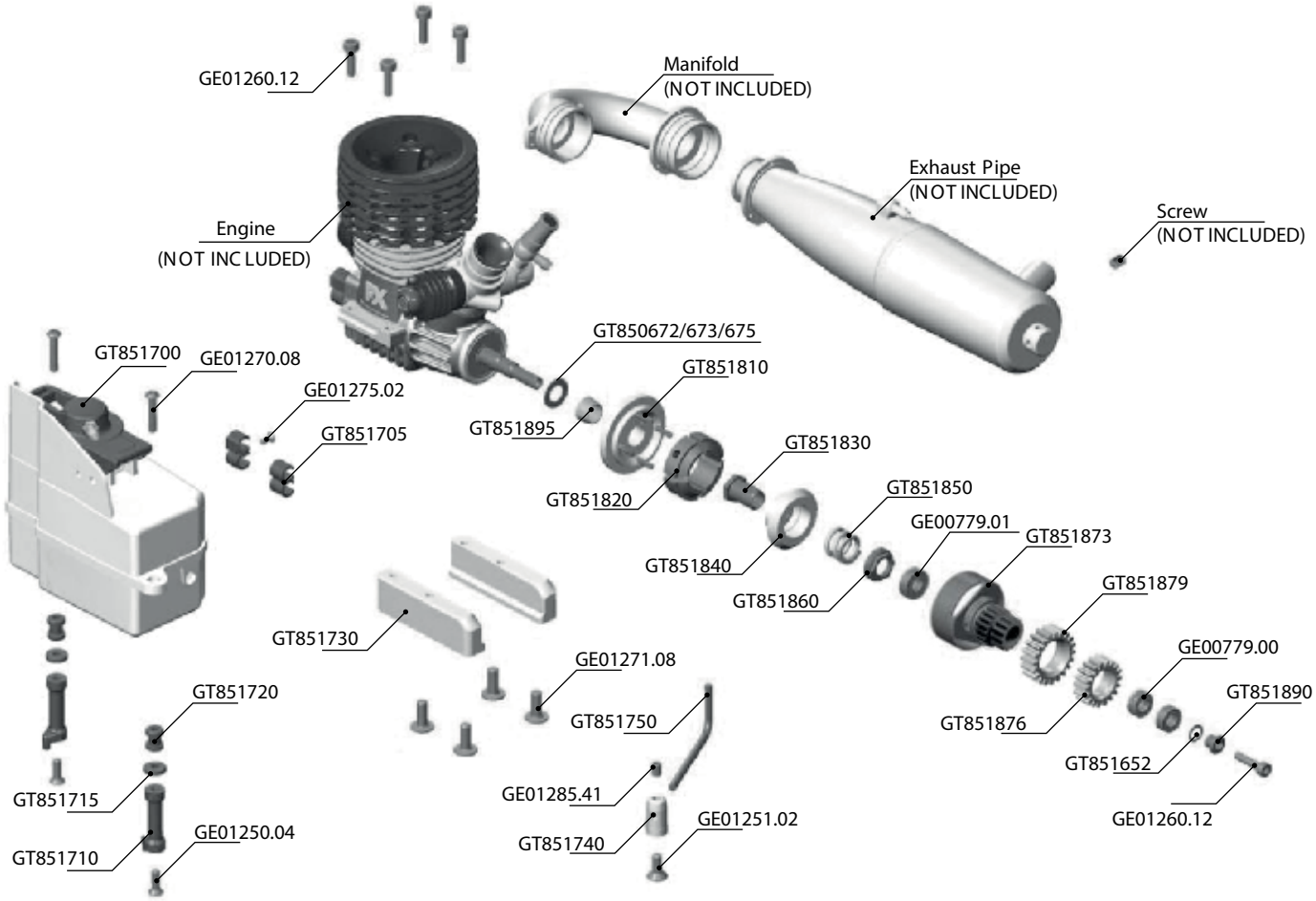

2020	VERSION
GT851870	

1ST	PINION	GEAR	HARD
GT851875	15	T	OPTION
GT851876	16	T	INC LUDED
GT851877	17	T	OPTION
GT851878	18	T	OPTION

2ST	PINION	GEAR	HARD
GT851879	19T	INCLUDED	
GT851880	20T	OPTION	
GT851881	21T	OPTION	

2022	VERSION
GT851873	14/19
GT851874	14/18
GT851871	13/18
GT851872	13/17

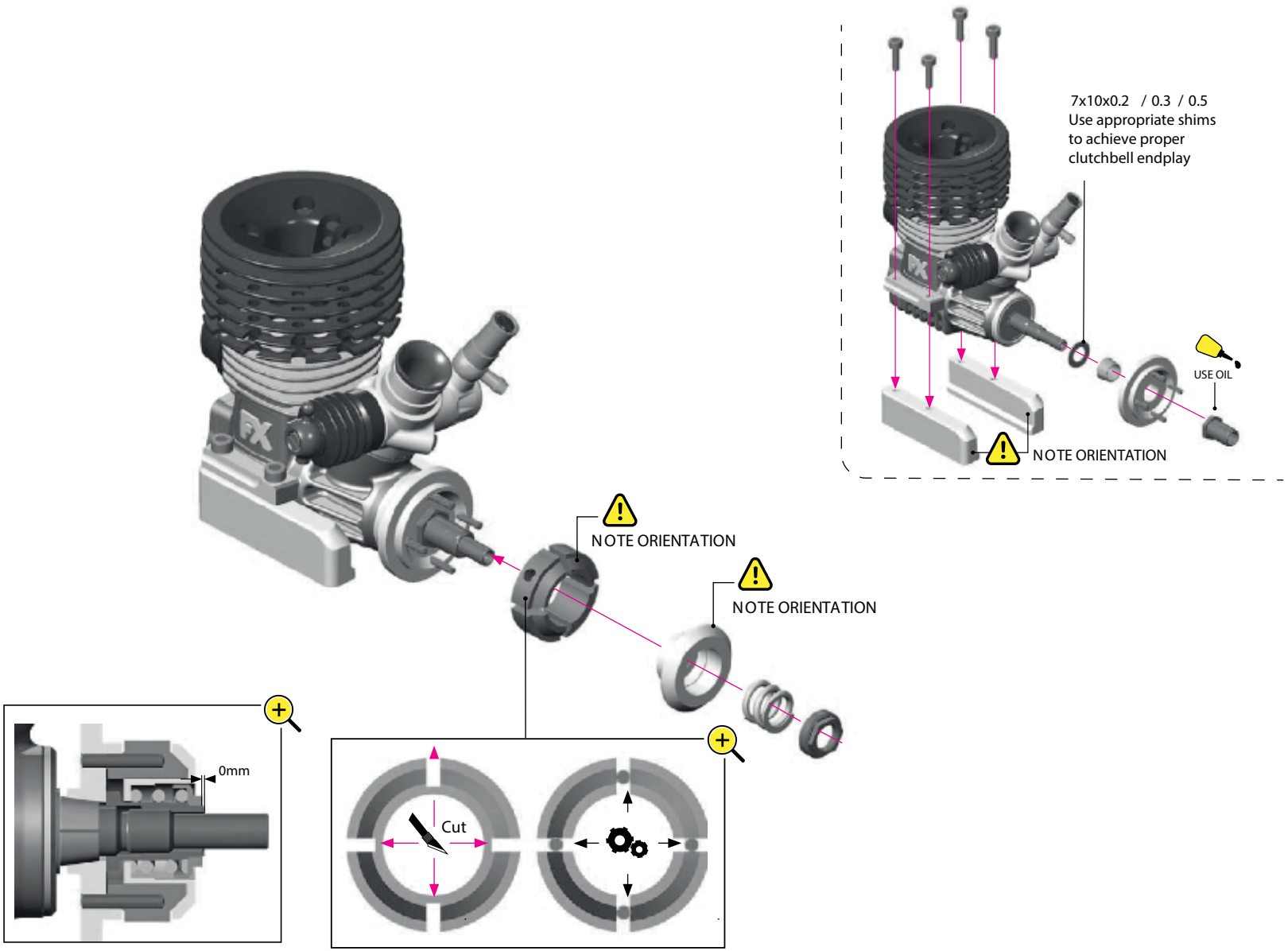
7x10x0.2 / 0.3 / 0.5
Use appropriate shims
to achieve proper
clutchbell endplay
USE OIL
NOTE ORIENTATION
NOTE ORIENTATION
NOTE ORIENTATION
0mm
Cut

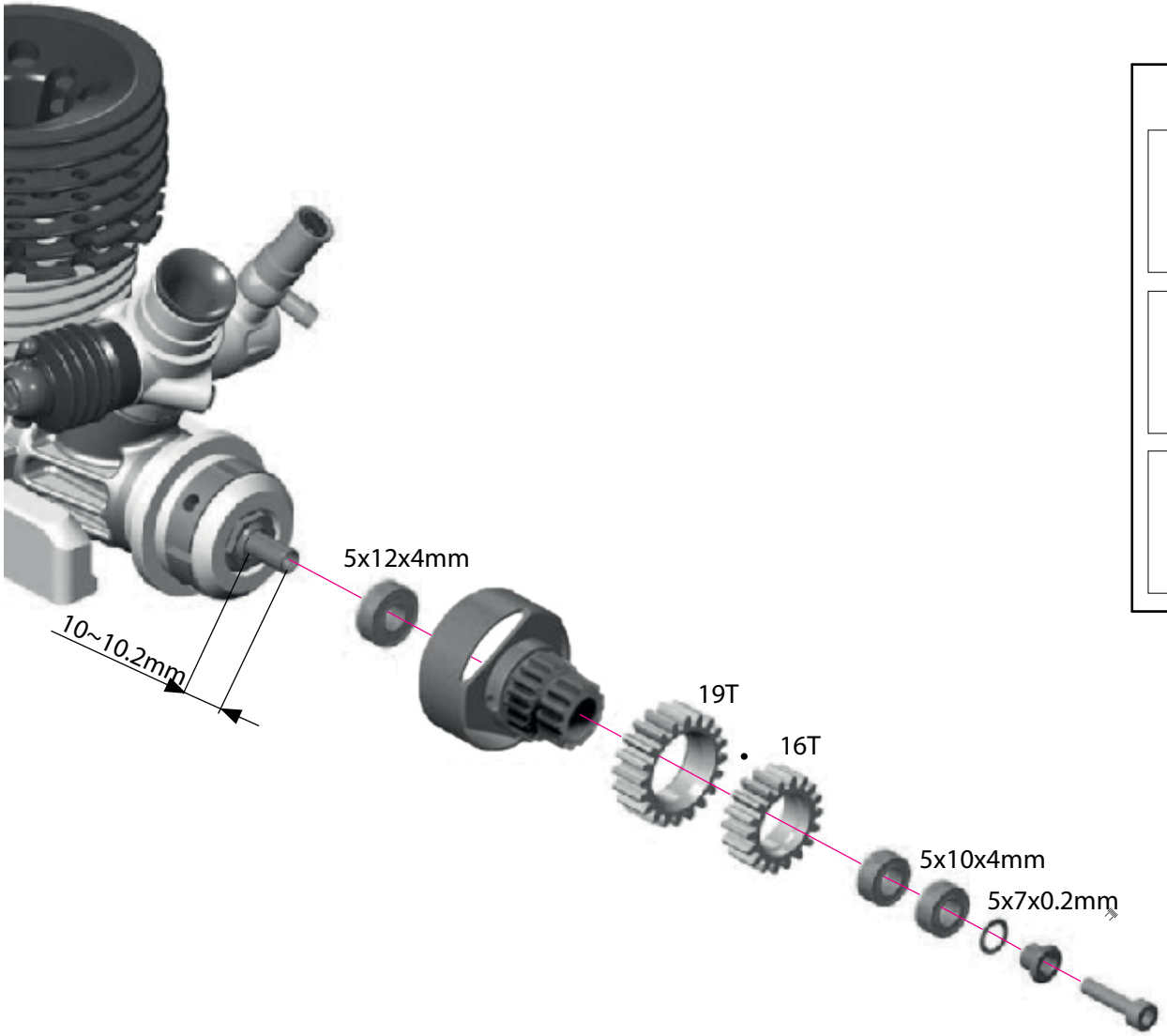

OPTIONAL

	GT851872 CLUTCH BELL ALU LIGHT 13/17
	GT851874 CLUTCH BELL ALU LIGHT 14/18
	GT851871 CLUTCH BELL ALU LIGHT 13/18

BAG.16 STEP A

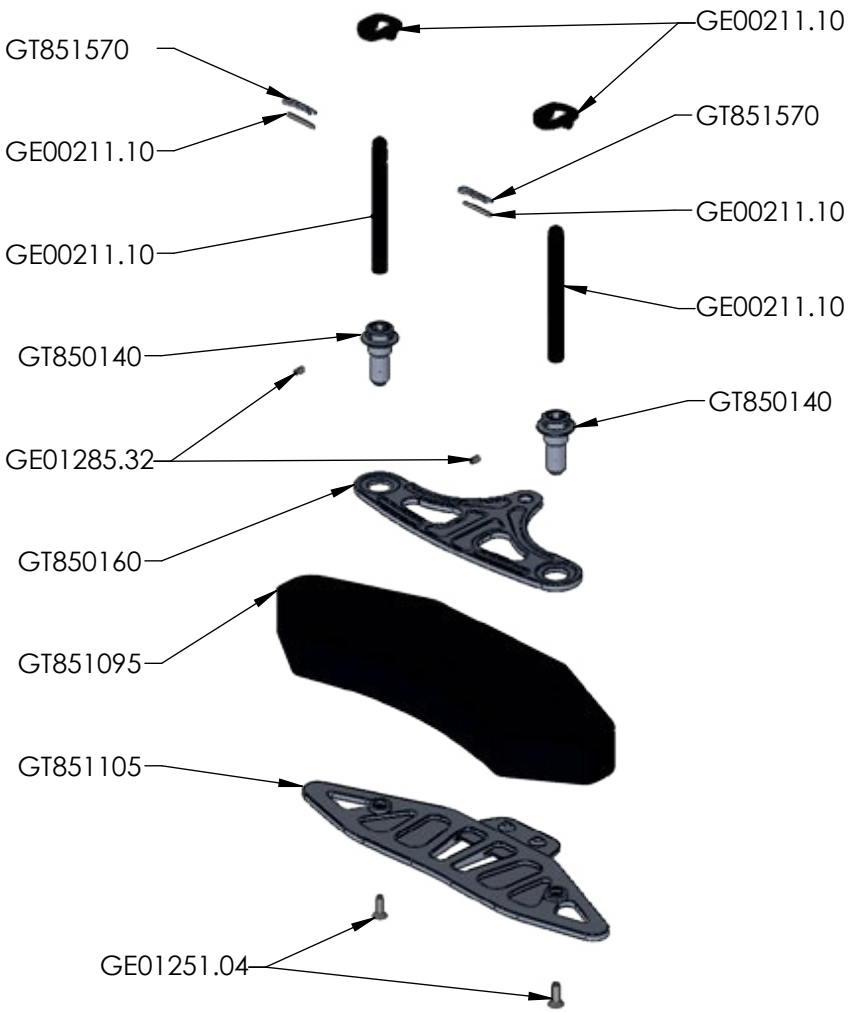

GE01251.04
M4X12

GE01285.32
M3X5

GE01280.24
2X20

GT851570

GT850140

GE00211.10

GE00211.10

BAG.16 STEP B

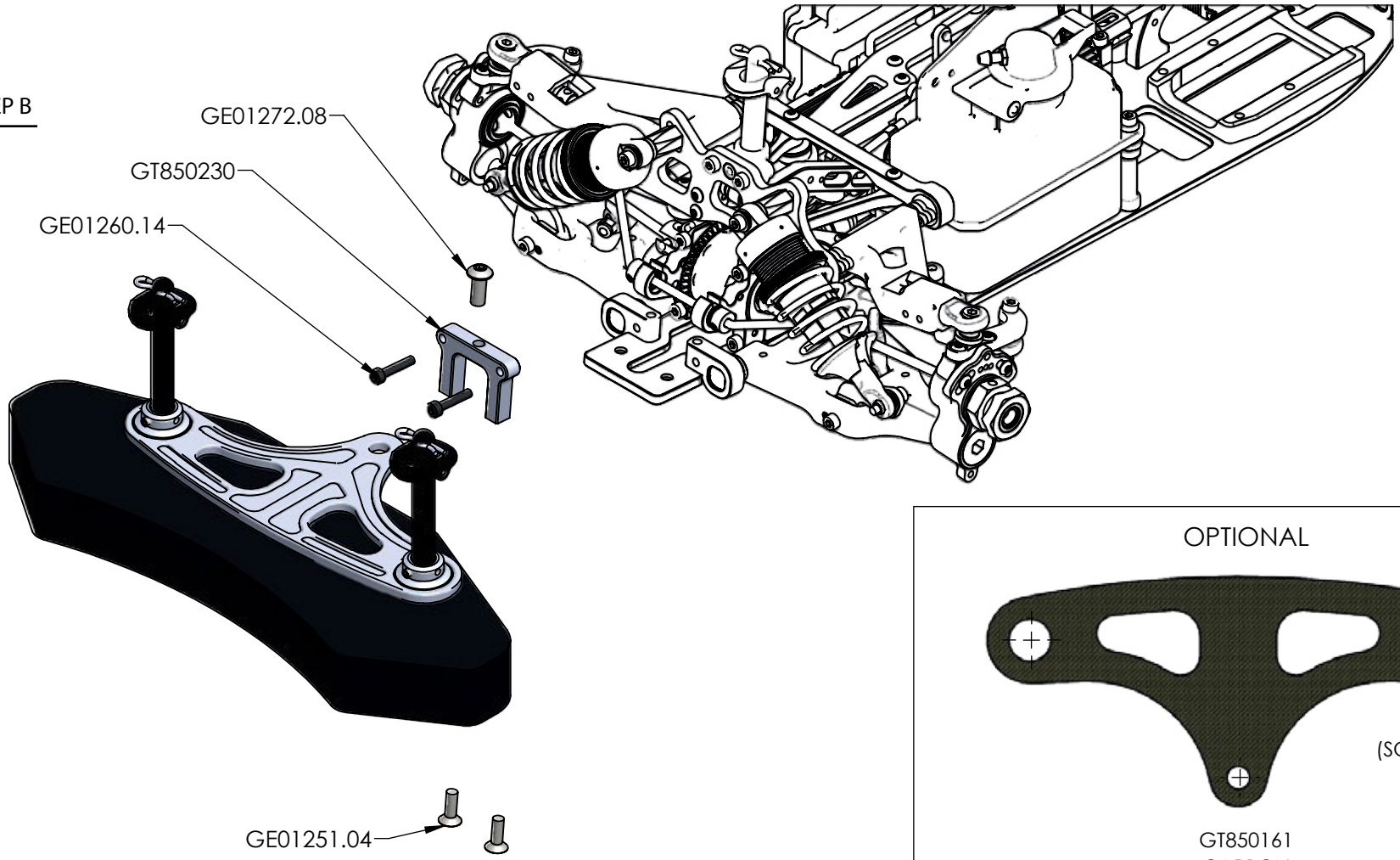

OPTIONAL

GT850161
CARBON

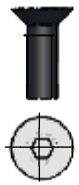

GE01251.04
M4X12

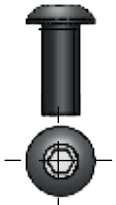

GE01272.08
M5X12

GE01260.14
M3X16

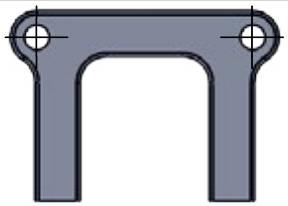

GT850230

OPTIONALS GTC8

AERO SERIES

GT859005
GRAPHITE
AERODYNAMIC DISC SET

LIGHT SERIES

GT851411
STEEL PIVOT BALL ALU LIGHT
13,7 MM

GT850313
ADJ STEERING TITANIUM LIGHT 3x35

GT851211
BALL STUD 6,8MM
WITH BACK STOP M3 ALU

GT851212
BALL STUD 6,8MM
WITH BACK STOP Ø3 ALU

GT850161
CARBON GRAPHITE BUMPER PLATE

GT850136
ADJ FROONT ARM TURNBUCKLE
M5 TITANIUM

RACE SERIES

GT859025
WEIGHTS 10 GR

GT859000
GRAPHITE SERVO GUARD

GT859020
BALANCE BRASS WEIGHT
ADJUSTABLE 30 GR + 12 GR

MODELTEK
di Noacco Zeno,
Via Madonna di Strada, 34
33048 San Giovanni al Natisone
(UD) Italia
+39 0432 1849976
info@genius-racing.com

www.modeltekshop.com
www.genius-racing.com
GeniusRacingXR