ISTRUZIONI DI MONTAGGIO - ASSEMBLY INSTRUCTION

FR2 EVO

GENIUS

2021

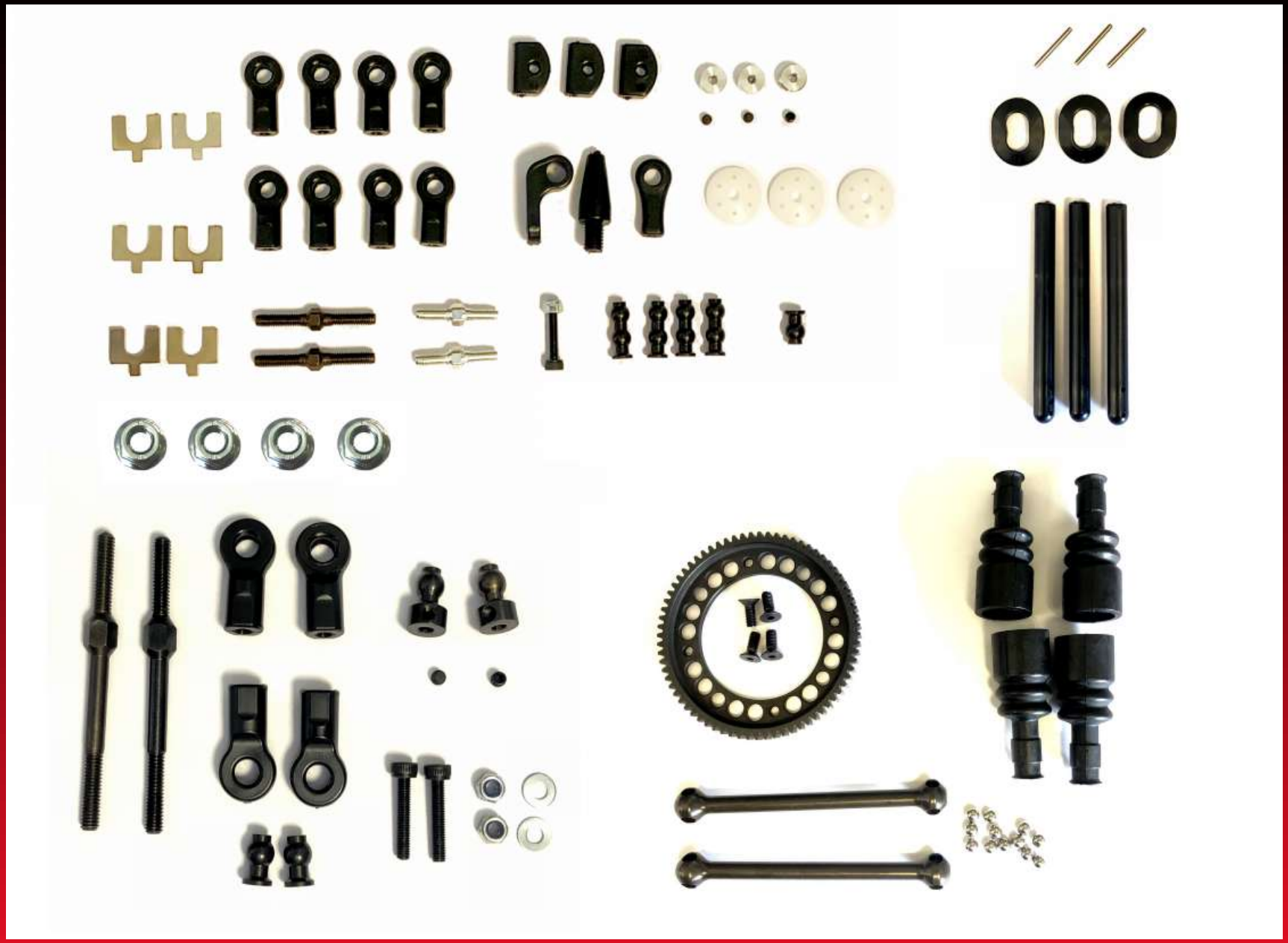

MOUNTING COMPONENTS #1

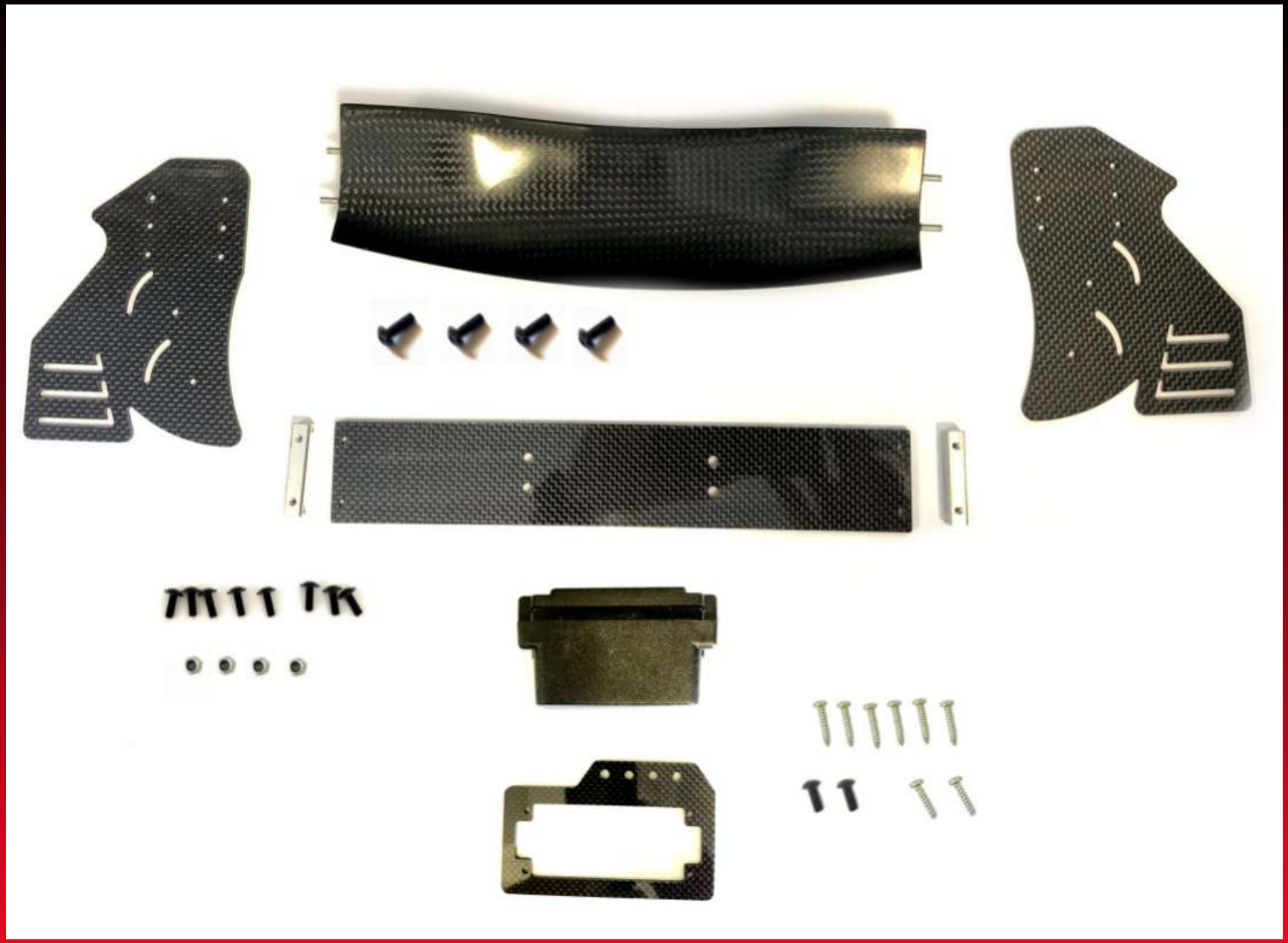

MOUNTING COMPONENTS #2

MOUNTING COMPONENTS #3

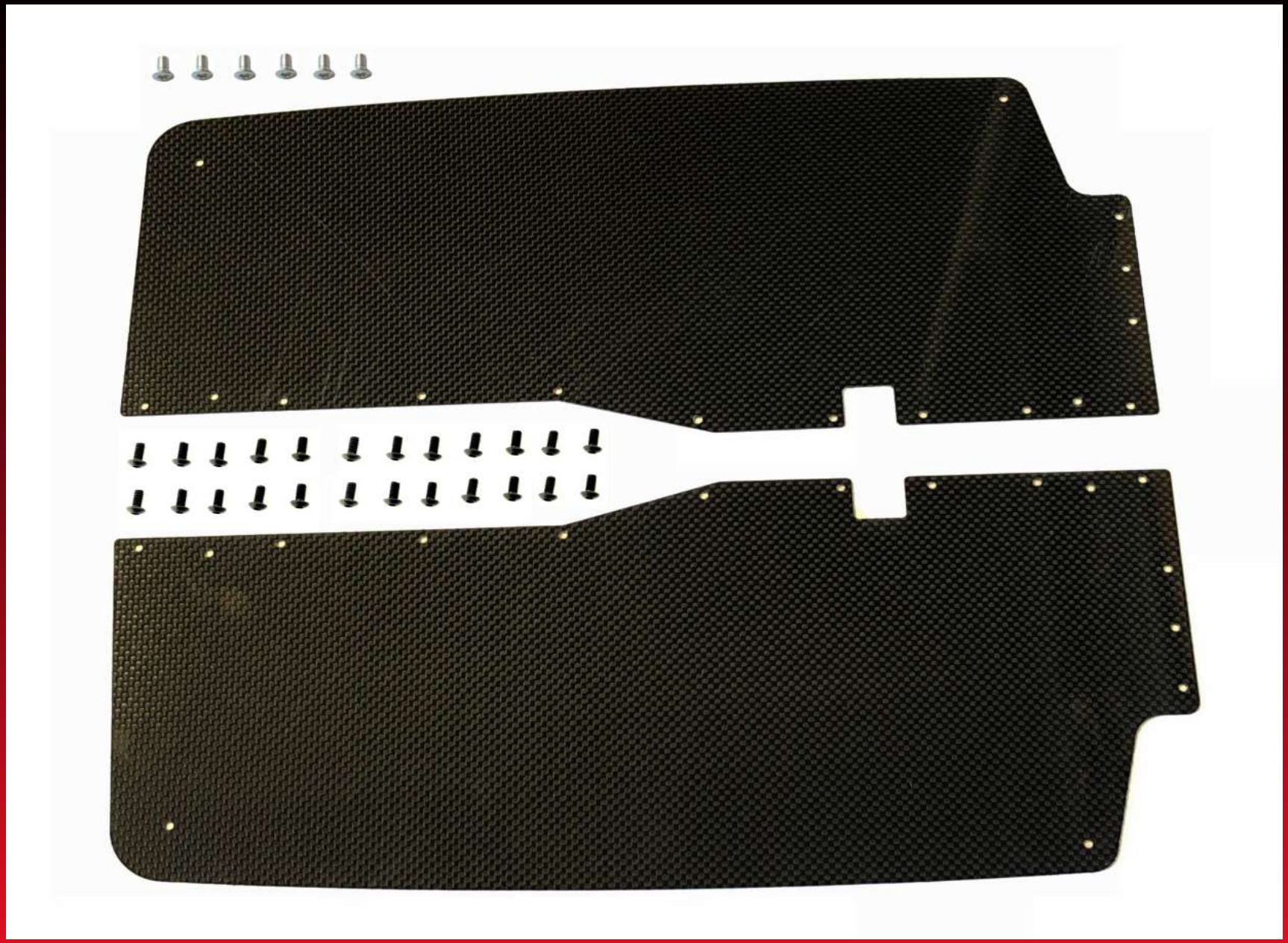

MOUNTING COMPONENTS #4

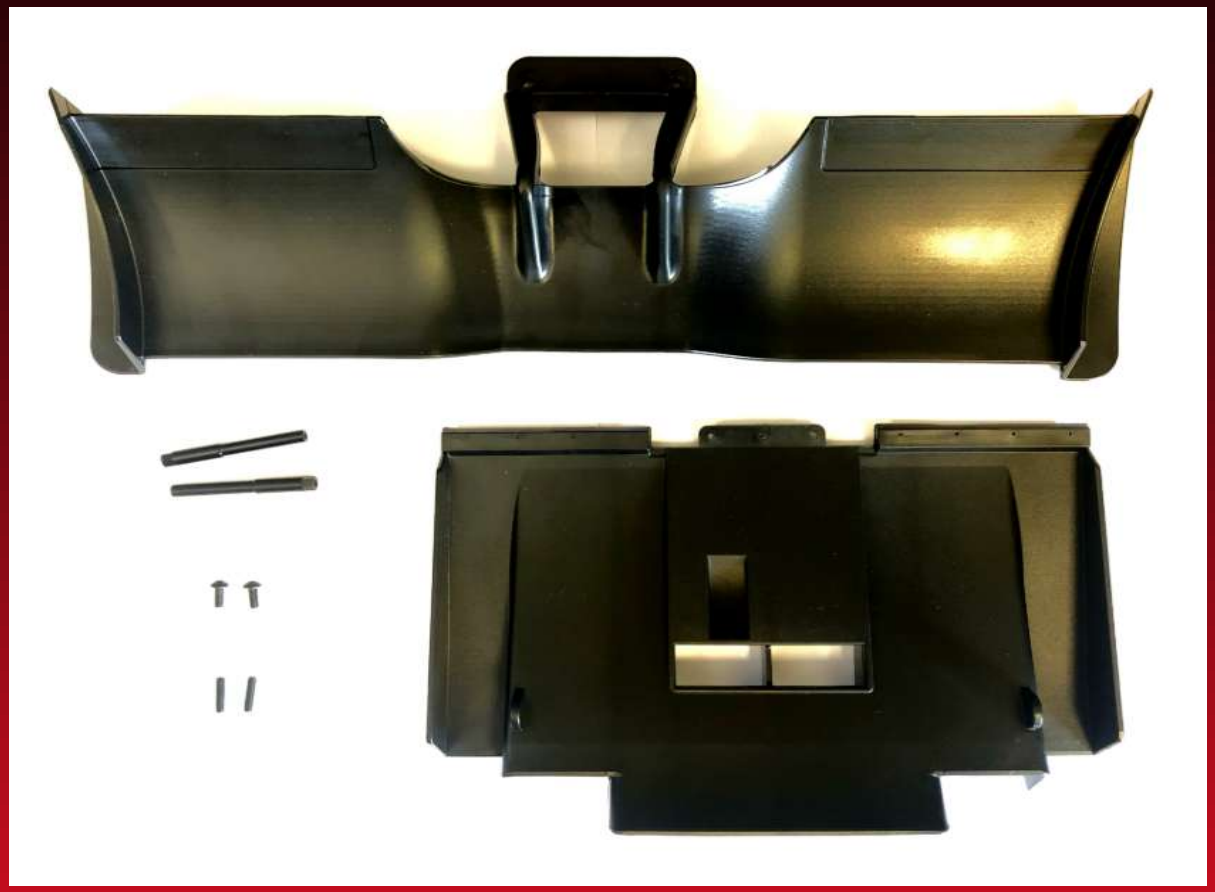

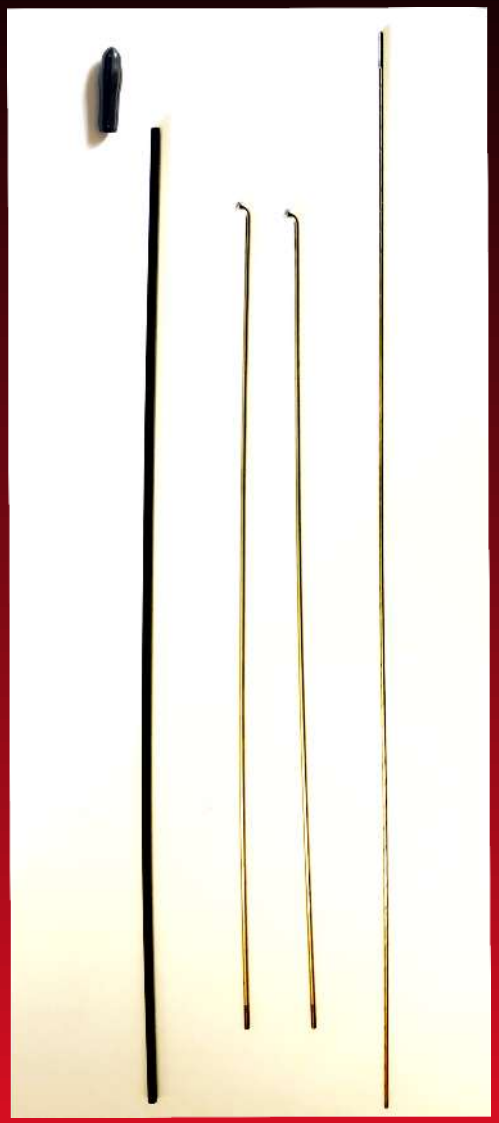

MOUNTING COMPONENTS #5 AND #6

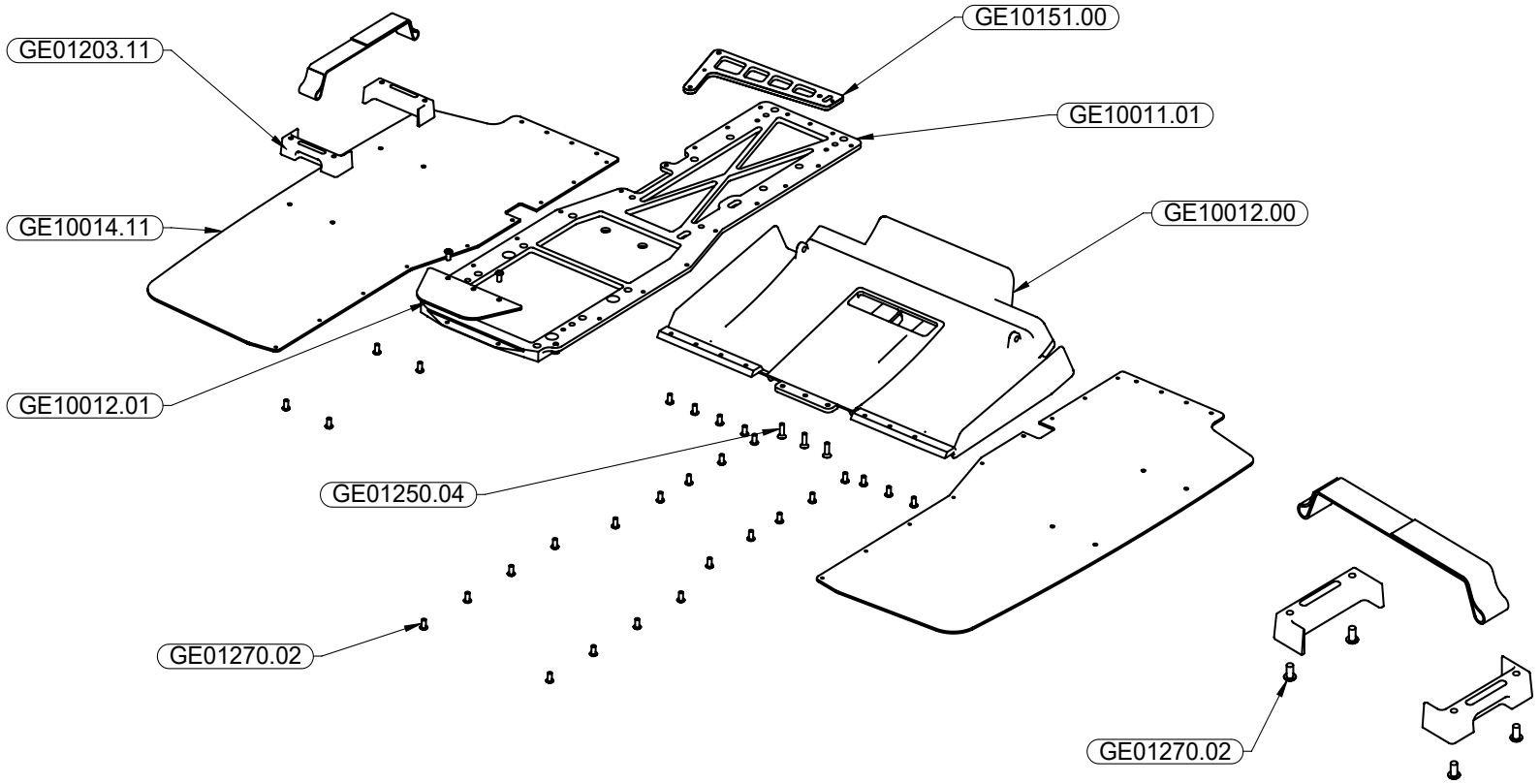

FR2-001

SUPPORTO BATTERIA HARD CASE SHORTY FR2
CODICE ORDINE: GE01203.11

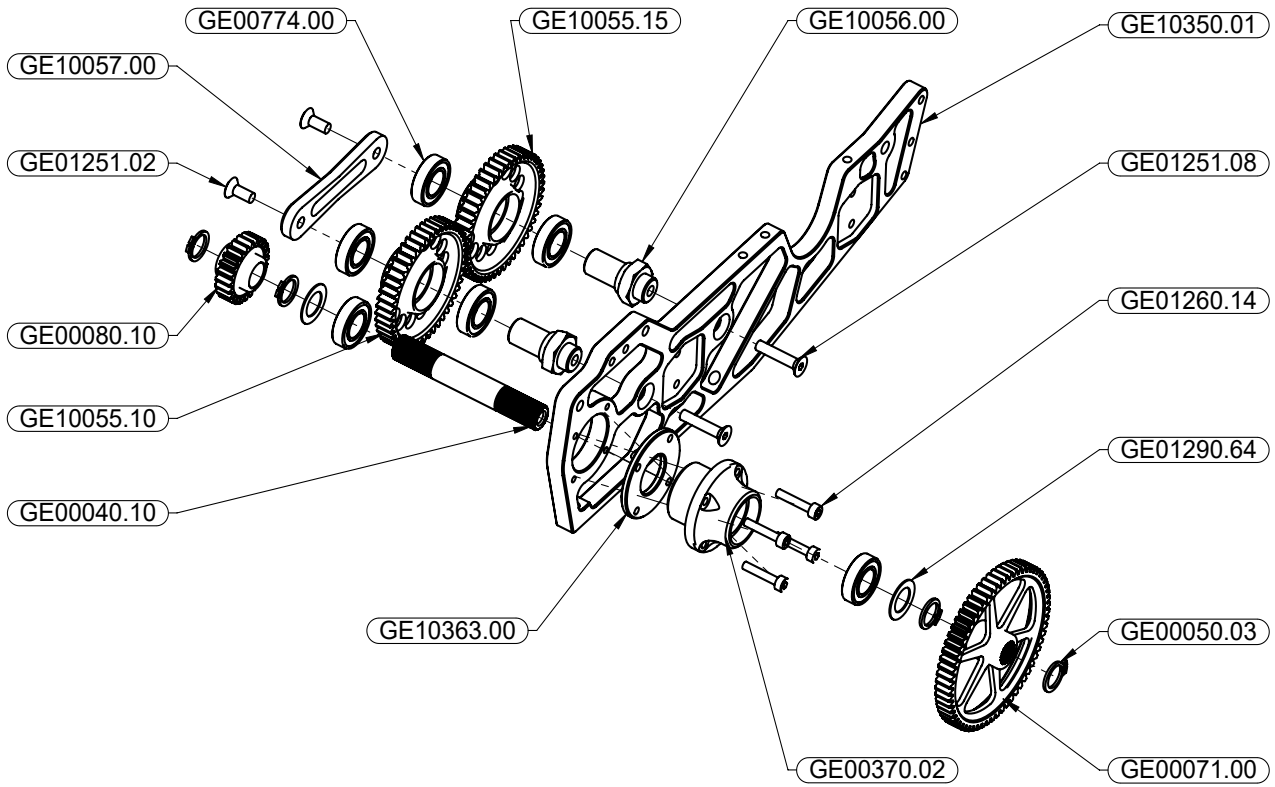

FR2-002

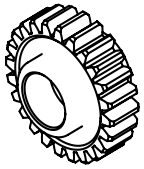

optional parts	
CODICE	DESCRIZIONE
GE00079.10	INGRANAGGIO Z24
GE00080.10	INGRANAGGIO Z25

optional parts	
CODICE	DESCRIZIONE
GE001290.60	RASAMENTO Ø10×0.1
GE001290.62	RASAMENTO Ø10×0.3
GE001290.64	RASAMENTO Ø10×0.5

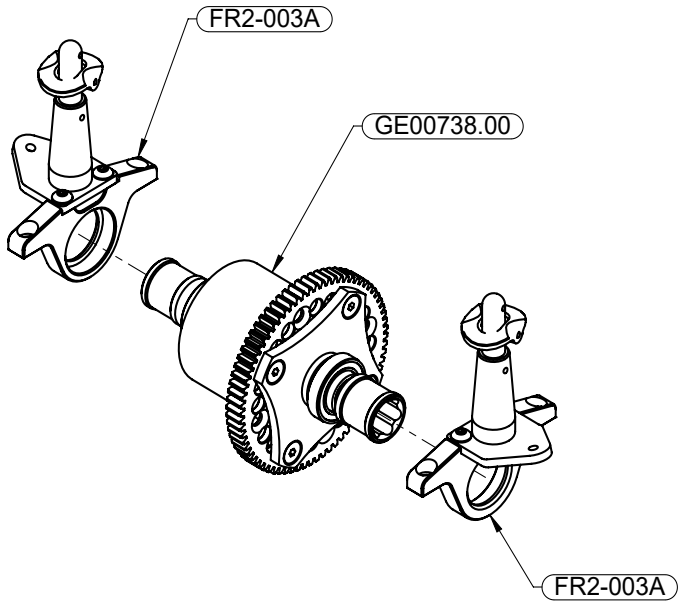

FR2-003

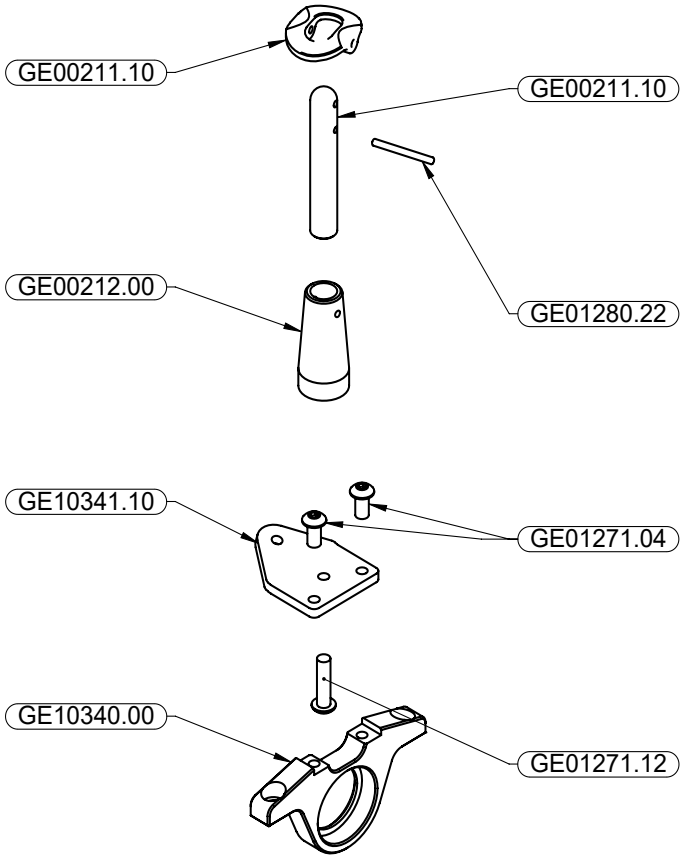

FR2-003A

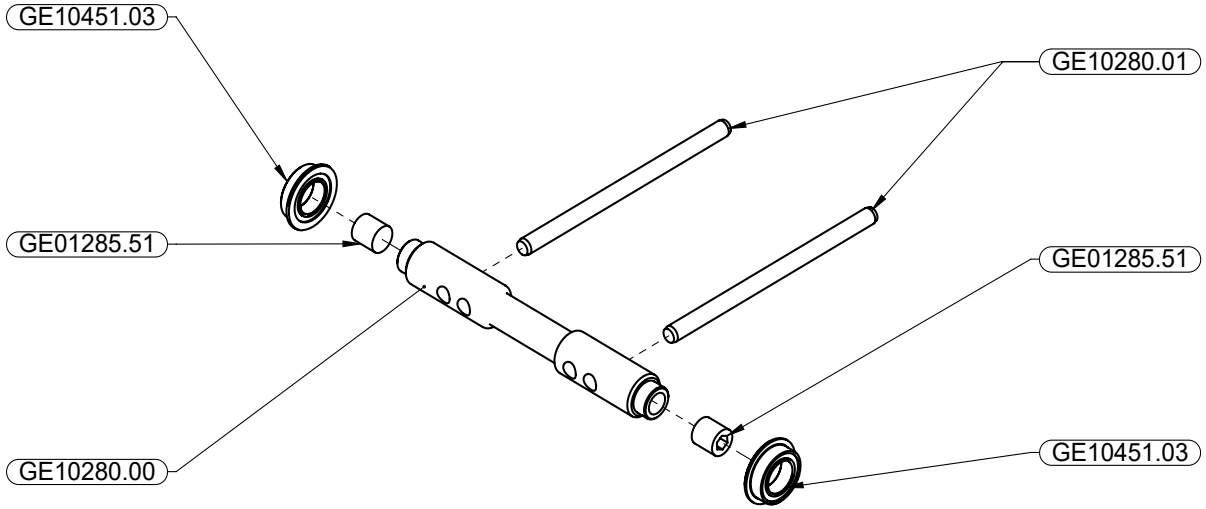
GE10451.03
GE01285.51
GE10280.00
GE10280.01
GE01285.51
GE10451.03

FR2-004

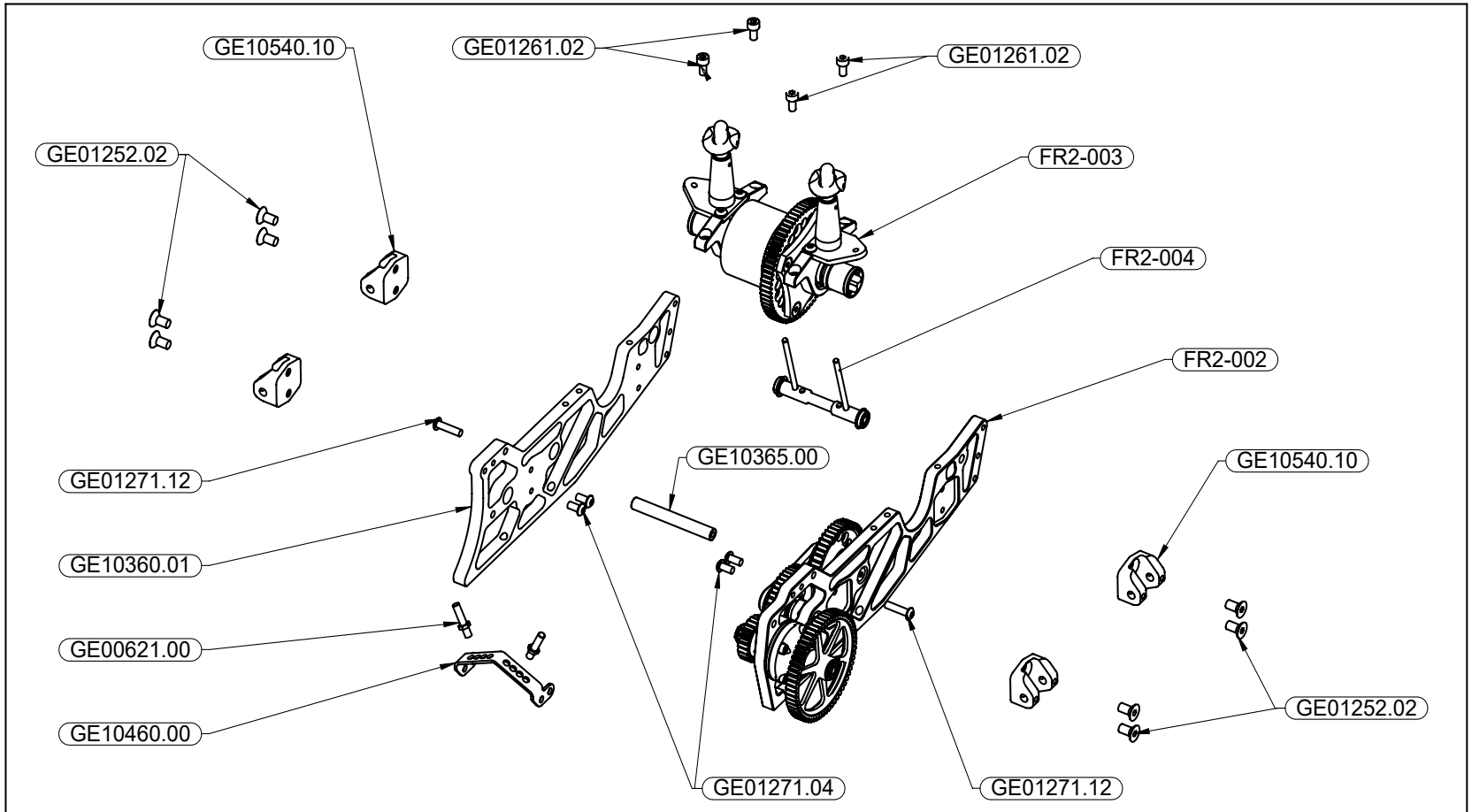
GE10540.10
GE01261.02
GE01261.02
GE01252.02
FR2-003
FR2-004
FR2-002
GE01271.12
GE10365.00
GE10540.10
GE10360.01
GE00621.00
GE01252.02
GE10460.00
GE01271.04
GE01271.12

FR2-005

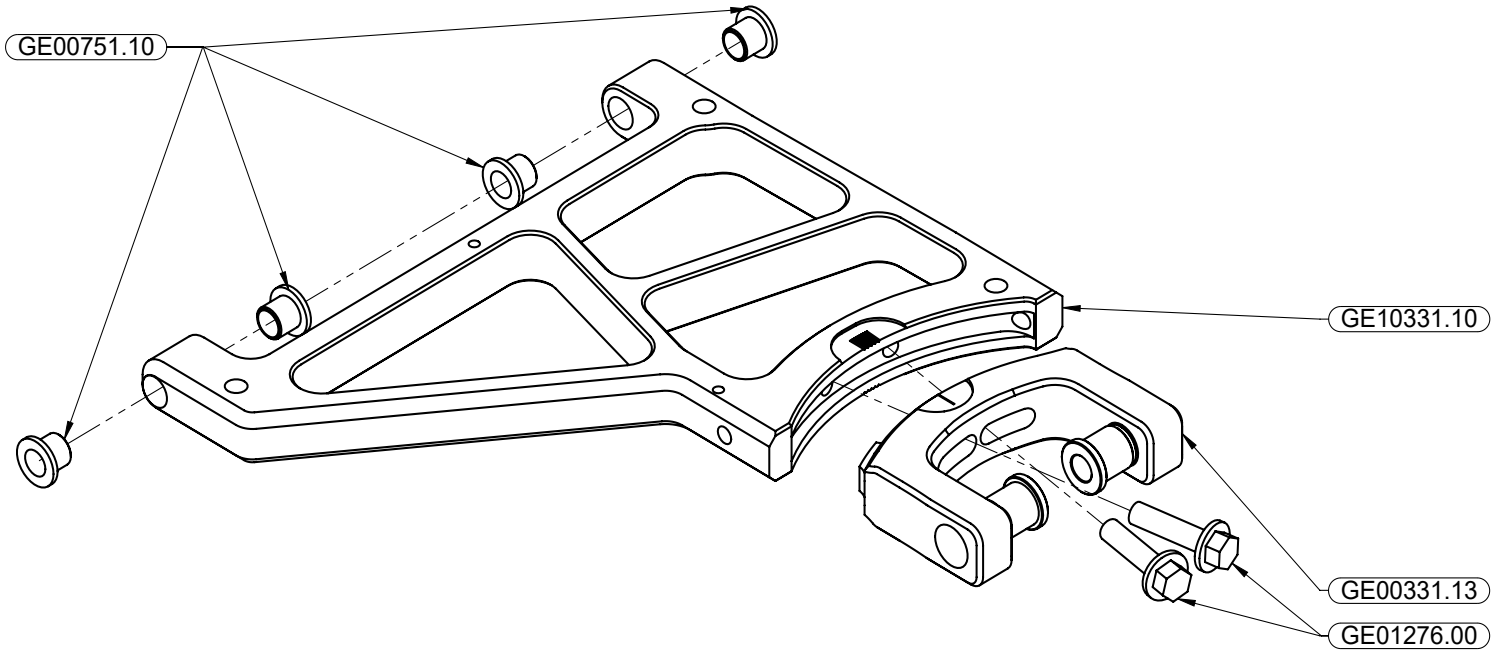

FR2-006

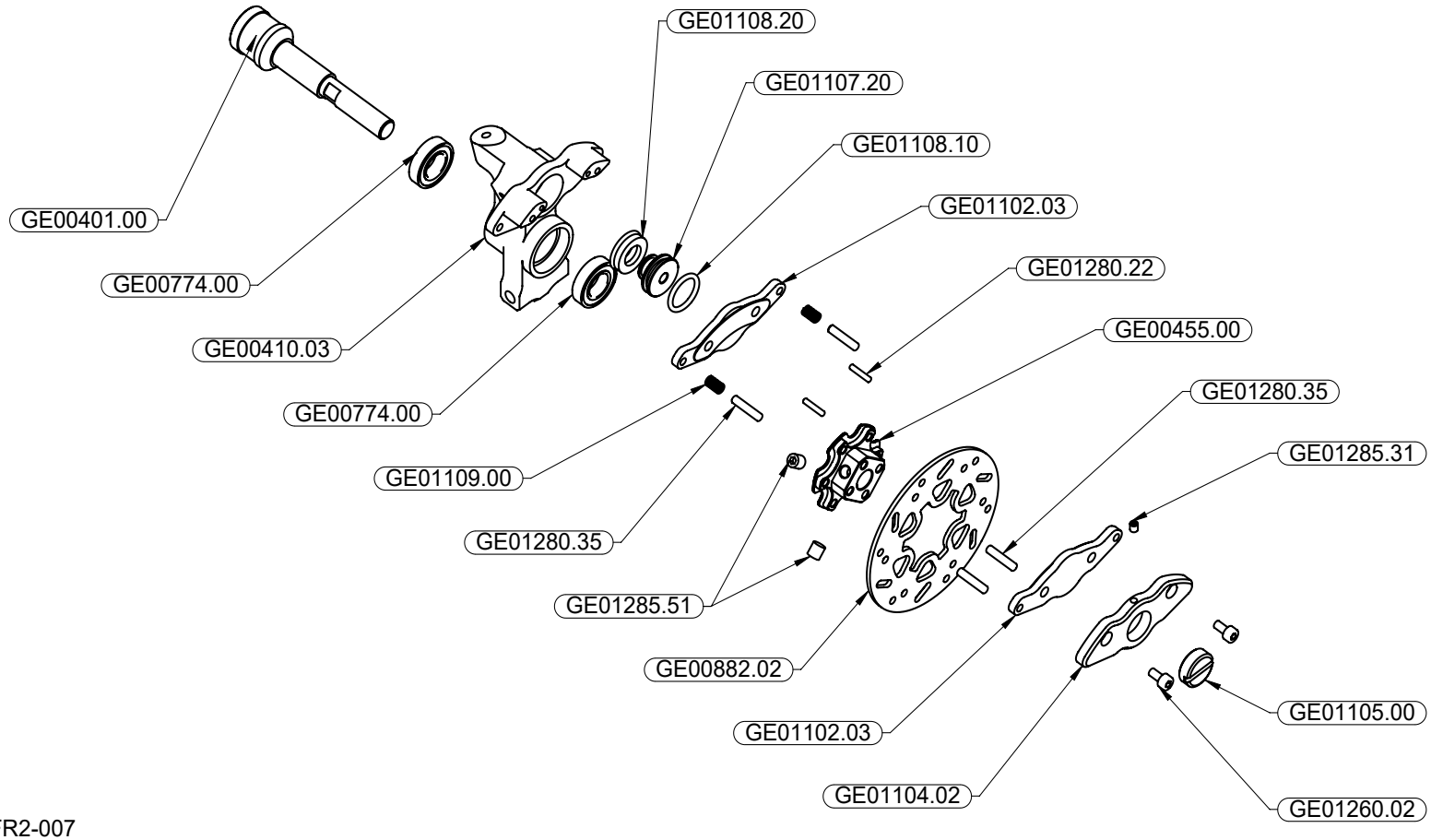
GE01108.20
GE01107.20
GE01108.10
GE01102.03
GE01280.22
GE00455.00
GE01280.35
GE01285.31
GE01105.00
GE01260.02
GE01104.02
GE01102.03
GE00882.02
GE01285.51
GE01280.35
GE01109.00
GE00774.00
GE00410.03
GE00774.00
GE00401.00

FR2-007

GE01106.00
GE01106.01
GE00872.01

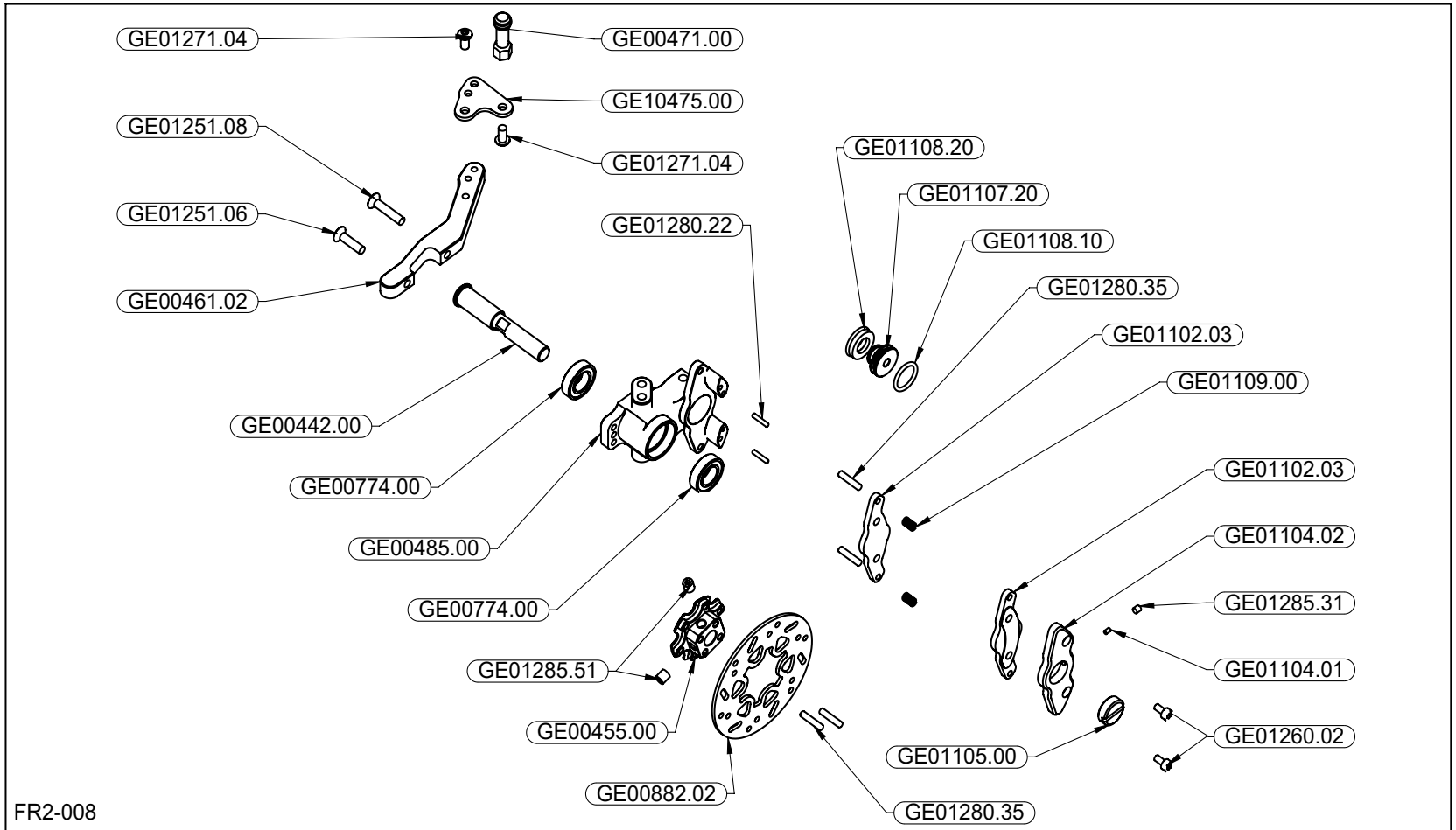
GE01271.04
GE00471.00
GE10475.00
GE01251.08
GE01271.04
GE01251.06
GE01280.22
GE00461.02
GE01108.20
GE01107.20
GE01108.10
GE01280.35
GE01102.03
GE01109.00
GE00442.00
GE00774.00
GE00485.00
GE00774.00
GE01102.03
GE01104.02
GE01285.31
GE01104.01
GE01285.51
GE00455.00
GE01105.00
GE01260.02
GE00882.02
GE01280.35
FR2-008

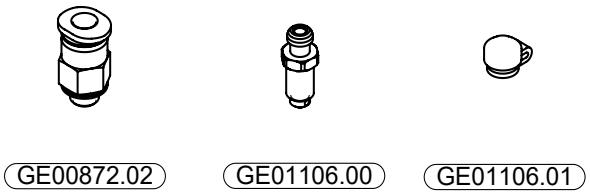
GE00872.02
GE01106.00
GE01106.01

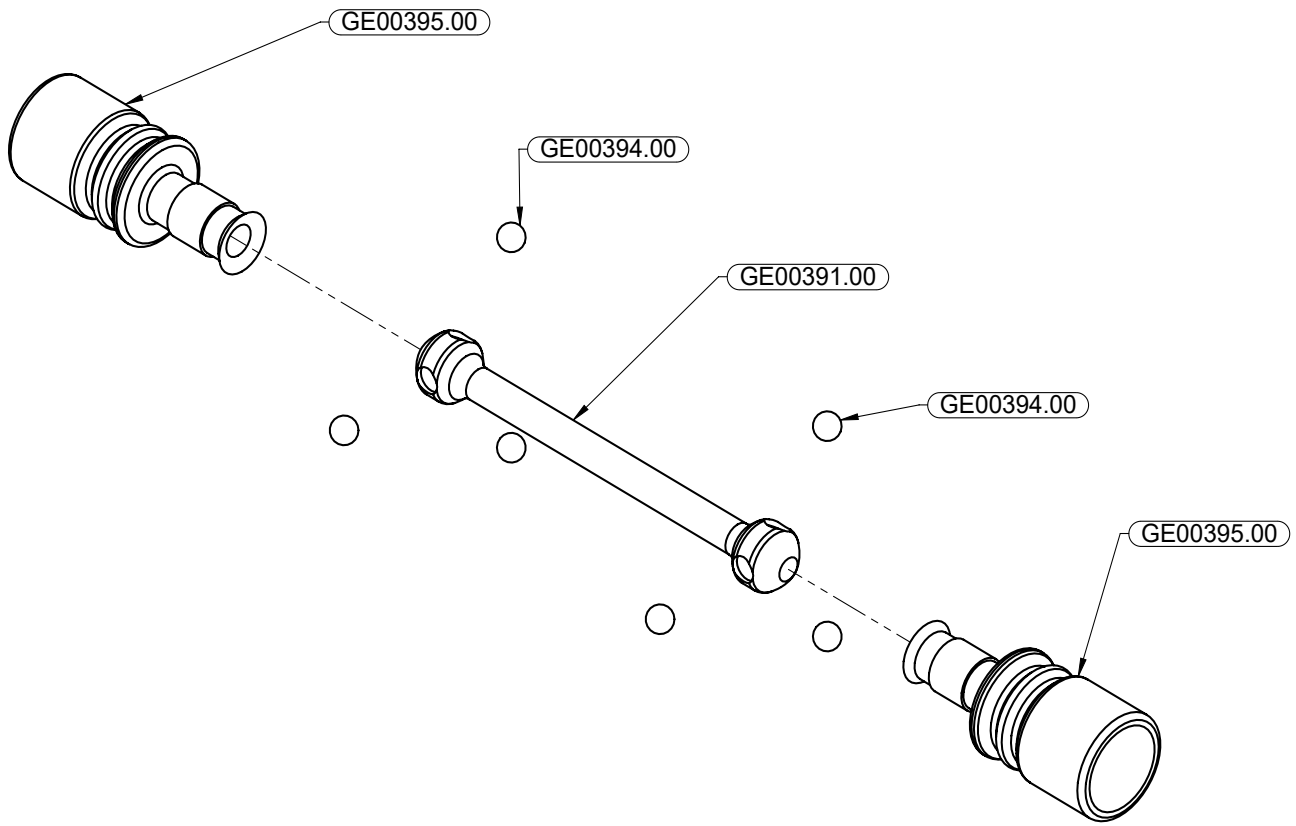

FASE 03.D

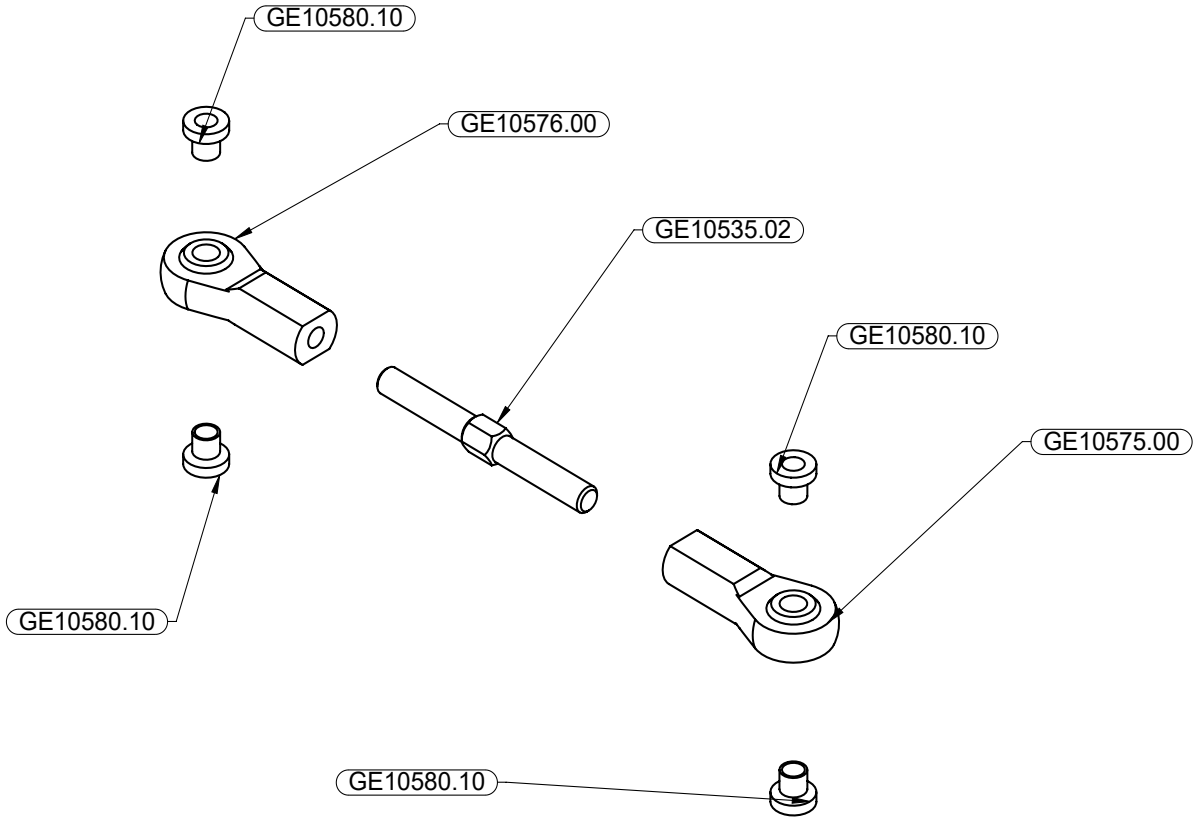

FR2-010_A

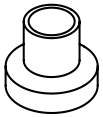

optional parts	
CODICE	DESCRIZIONE
GE10580.20	BOCCOLA ACCIAIO PER UNIBALL IGUS +2mm
GE10580.40	BOCCOLA ACCIAIO PER UNIBALL IGUS +4mm
GE10580.60	BOCCOLA ACCIAIO PER UNIBALL IGUS +6mm

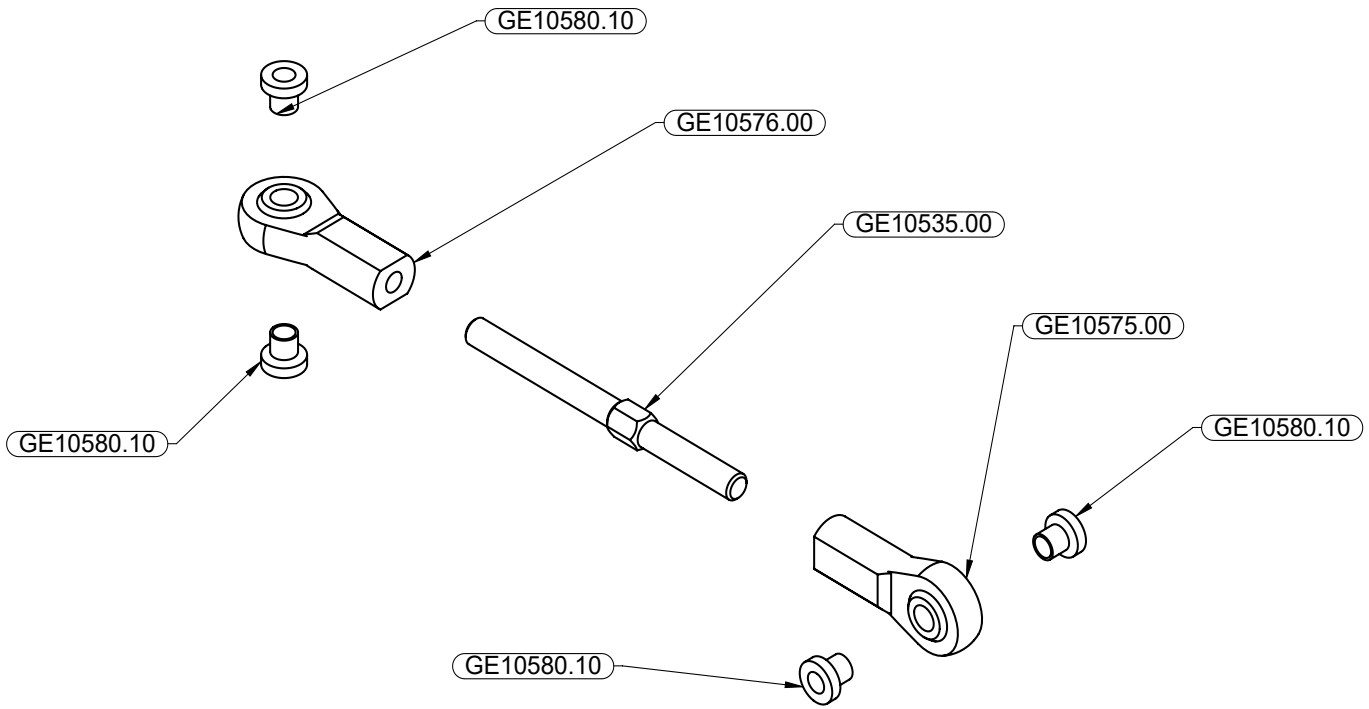
GE10580.10
GE10576.00
GE10535.00
GE10575.00
GE10580.10
GE10580.10
GE10580.10

FR2-010_B

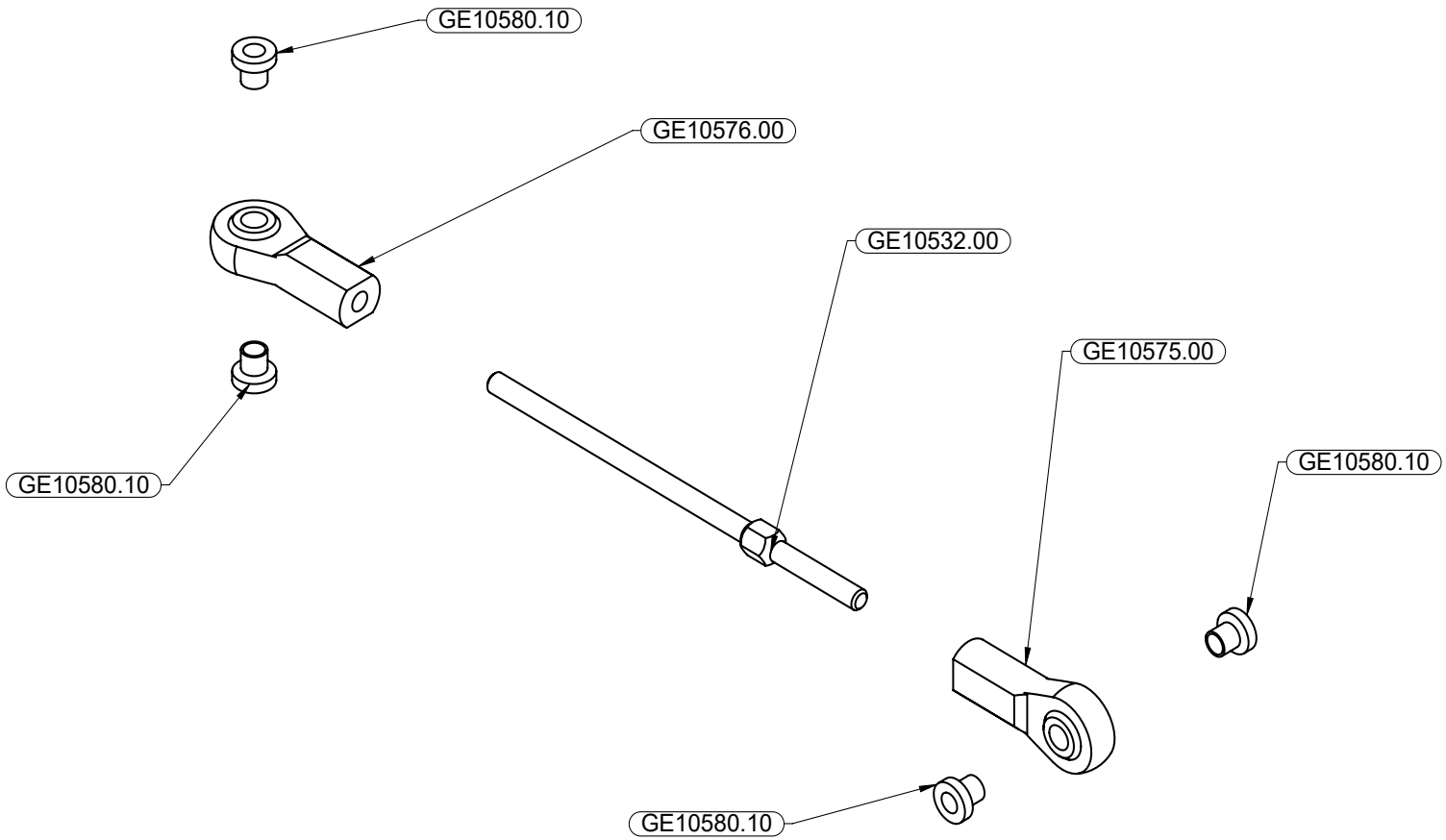
GE10580.10
GE10576.00
GE10532.00
GE10575.00
GE10580.10
GE10580.10
GE10580.10

FR2-010_C

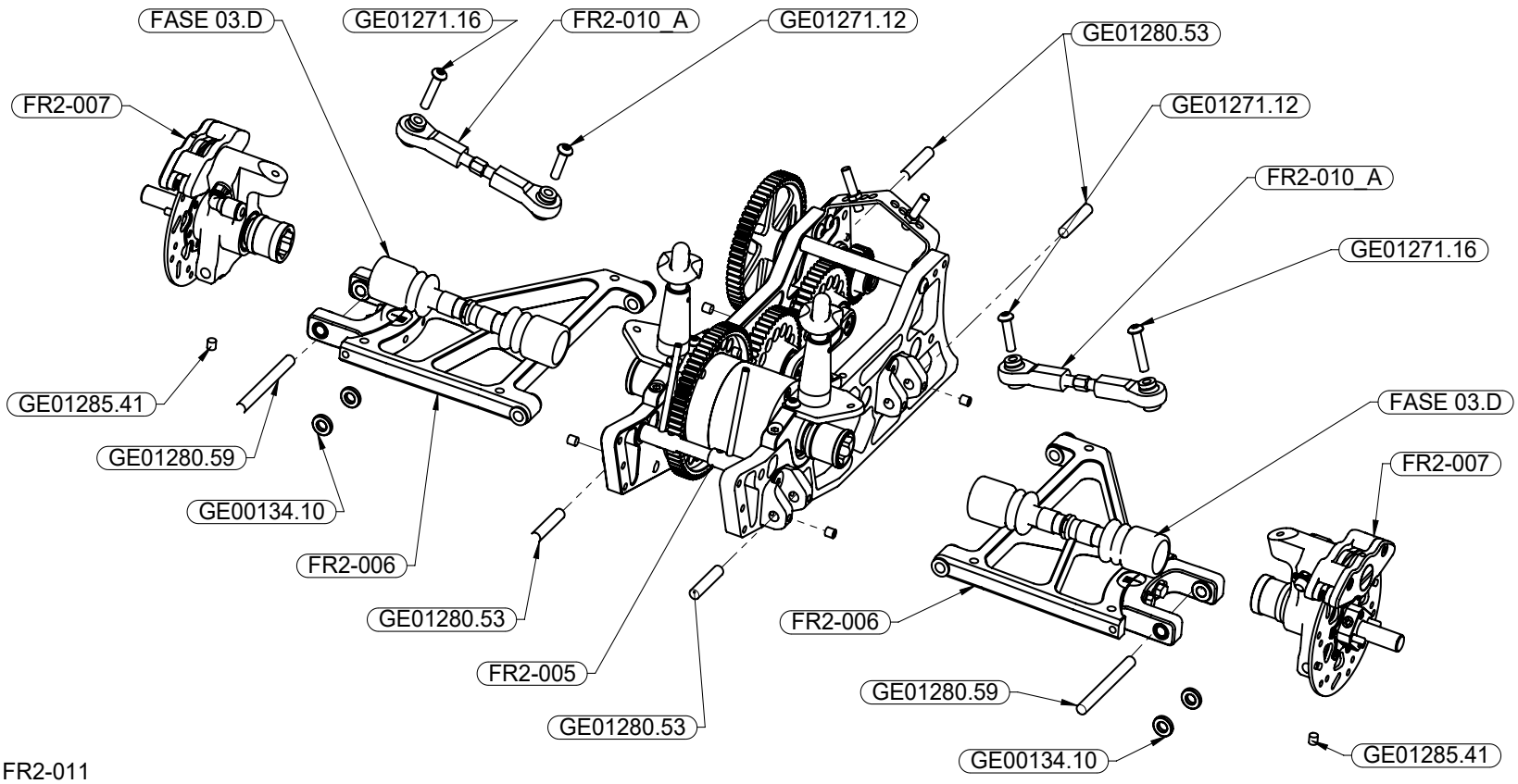
FASE 03.D
GE01271.16
FR2-010_A
GE01271.12
GE01280.53
FR2-007
GE01271.12
FR2-010_A
GE01271.16
GE01285.41
GE01280.59
GE00134.10
FR2-006
GE01280.53
FR2-005
GE01280.53
FASE 03.D
FR2-007
FR2-006
GE01280.59
GE00134.10
GE01285.41

FR2-011

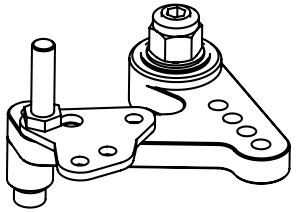

Dx

FR2-012SX

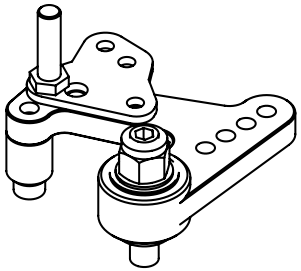

Sx

FR2-012DX

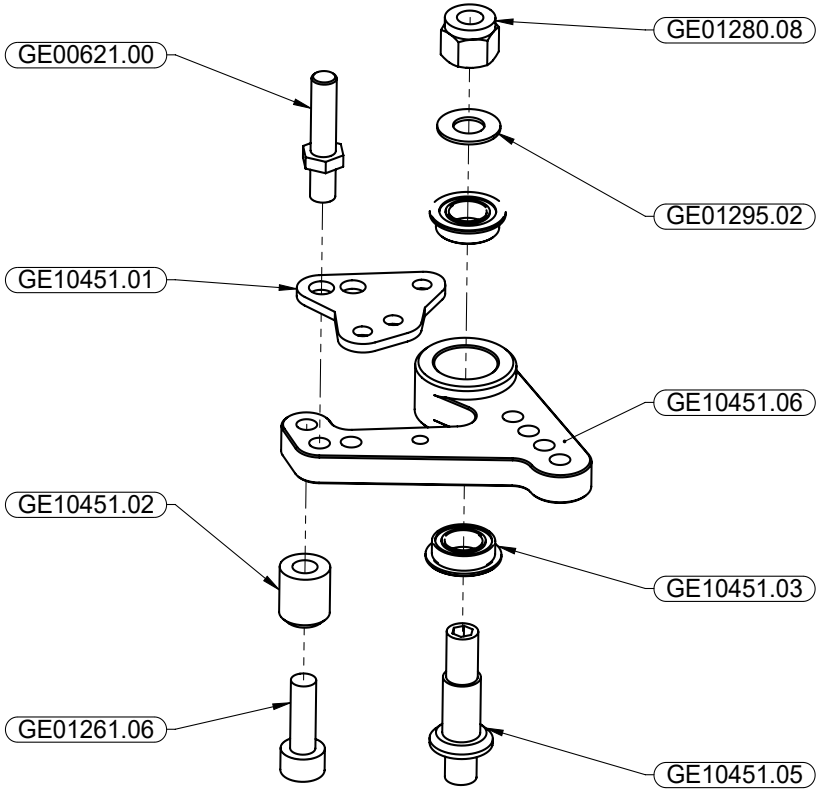

FR2-012

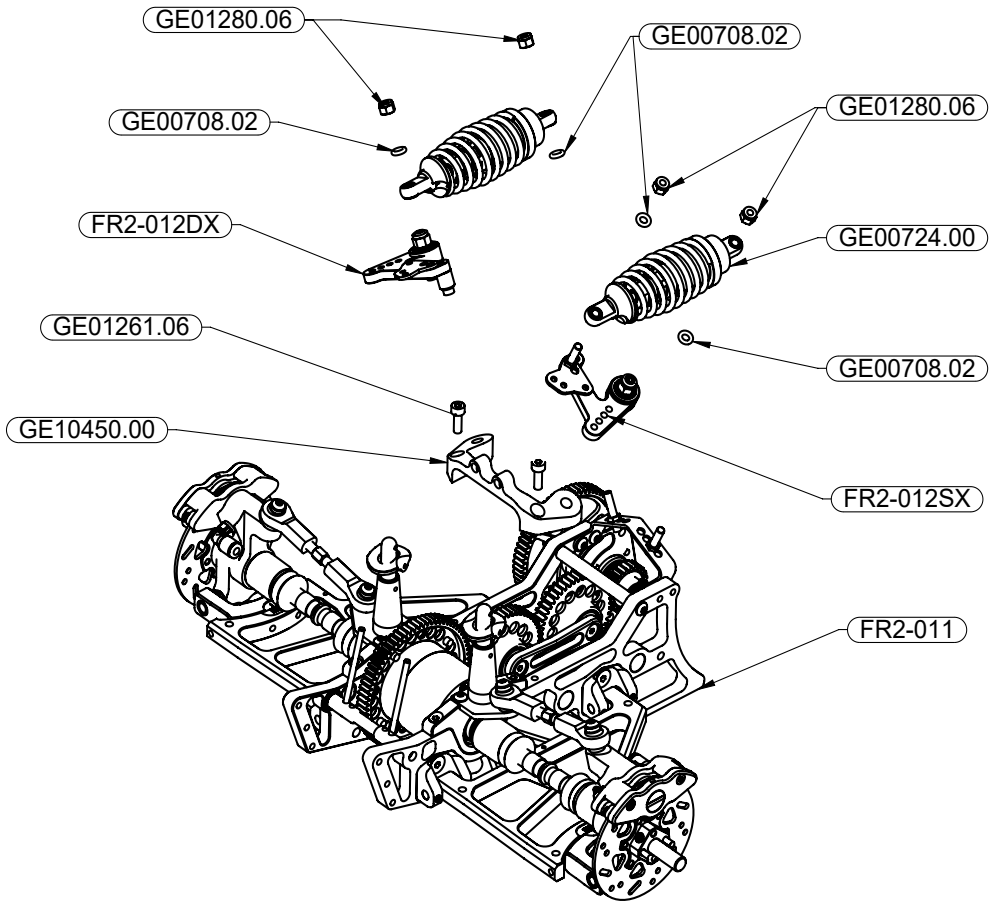
GE01280.06
GE00708.02
GE00708.02
GE01280.06
FR2-012DX
GE00724.00
GE01261.06
GE00708.02
GE10450.00
FR2-012SX
FR2-011

FR2-013

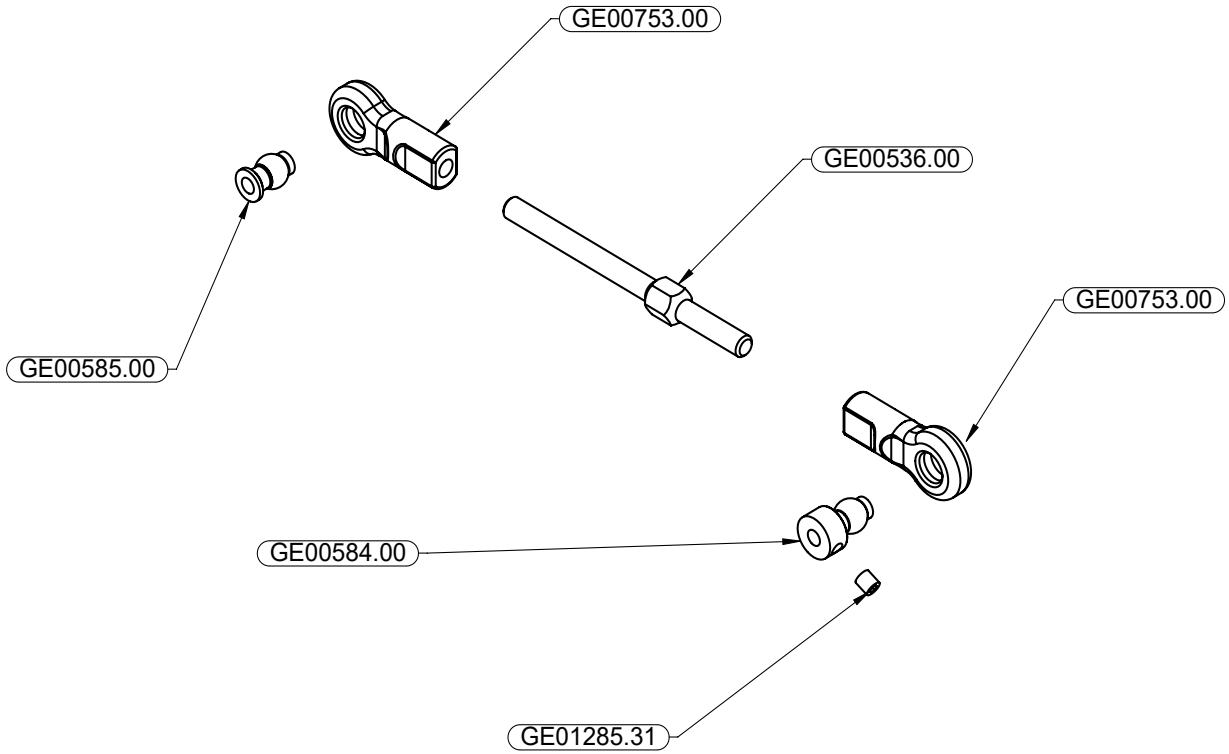
GE00753.00
GE00536.00
GE00753.00
GE00585.00
GE00584.00
GE01285.31

FR2-014

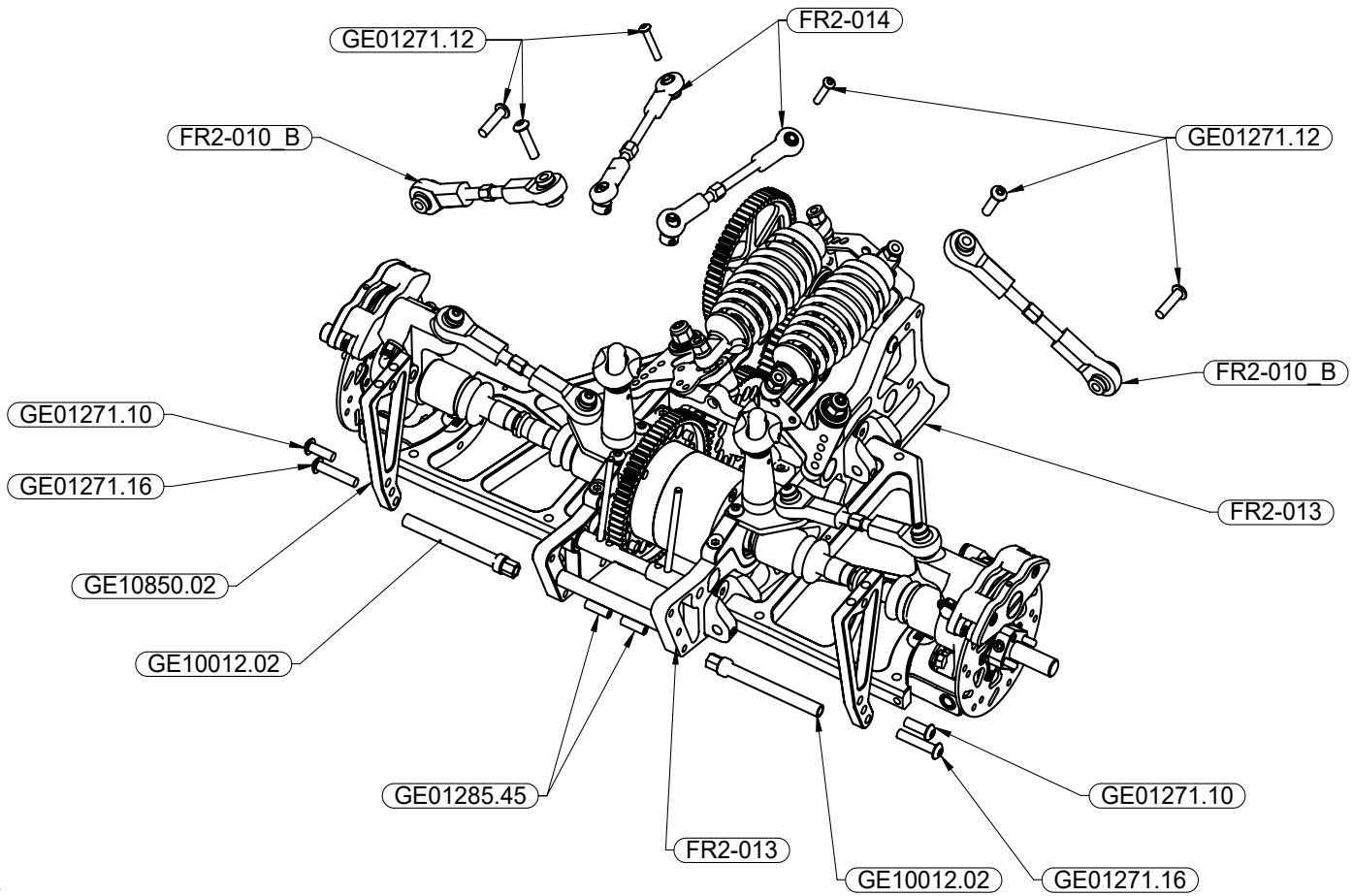
GE01271.12
FR2-014
FR2-010_B
GE01271.12
FR2-010_B
GE01271.10
GE01271.16
FR2-013
GE10850.02
GE10012.02
GE01285.45
GE01271.10
FR2-013
GE10012.02
GE01271.16

FR2-015

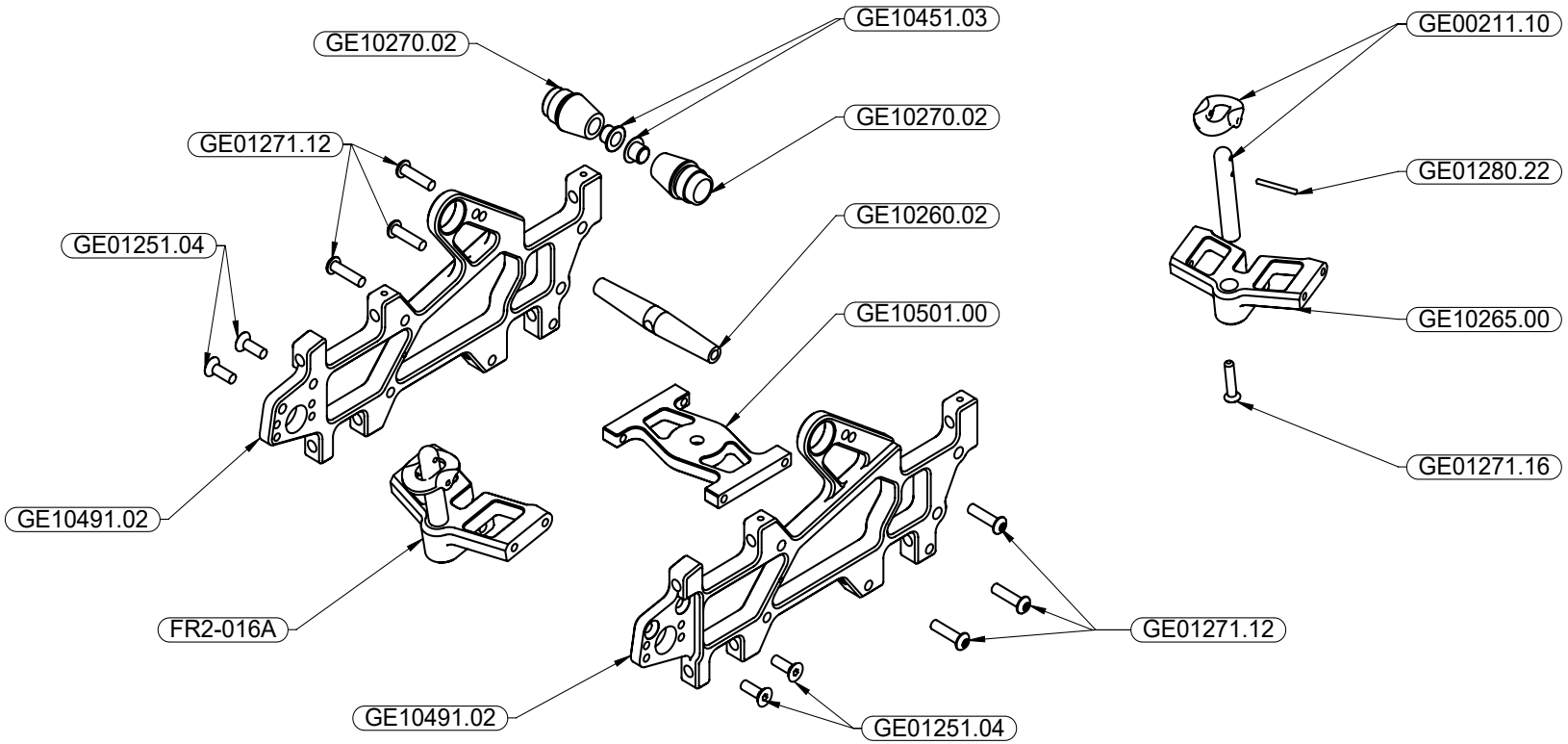

FR2-016

FR2-016A

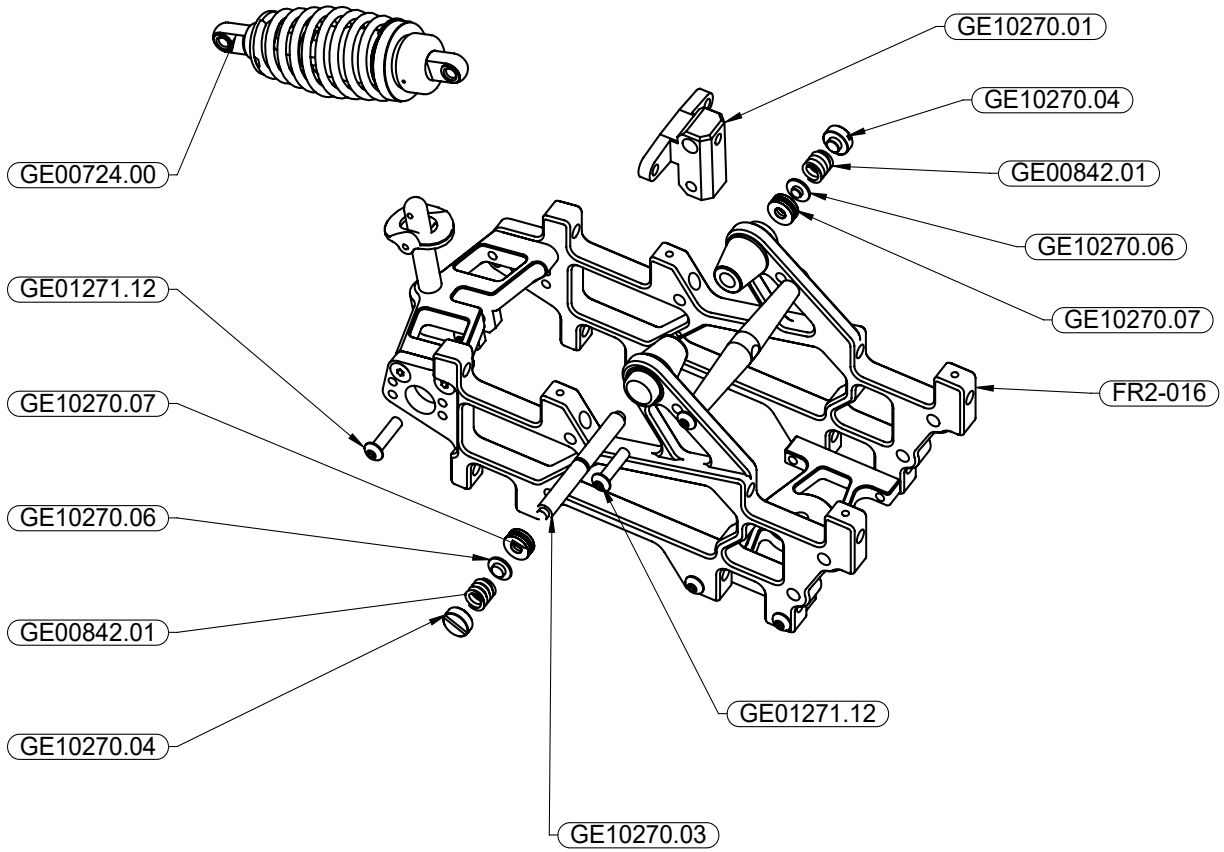
GE10270.01
GE10270.04
GE00842.01
GE10270.06
GE10270.07
FR2-016
GE00724.00
GE01271.12
GE10270.07
GE10270.06
GE00842.01
GE10270.04
GE01271.12
GE10270.03

FR2-017

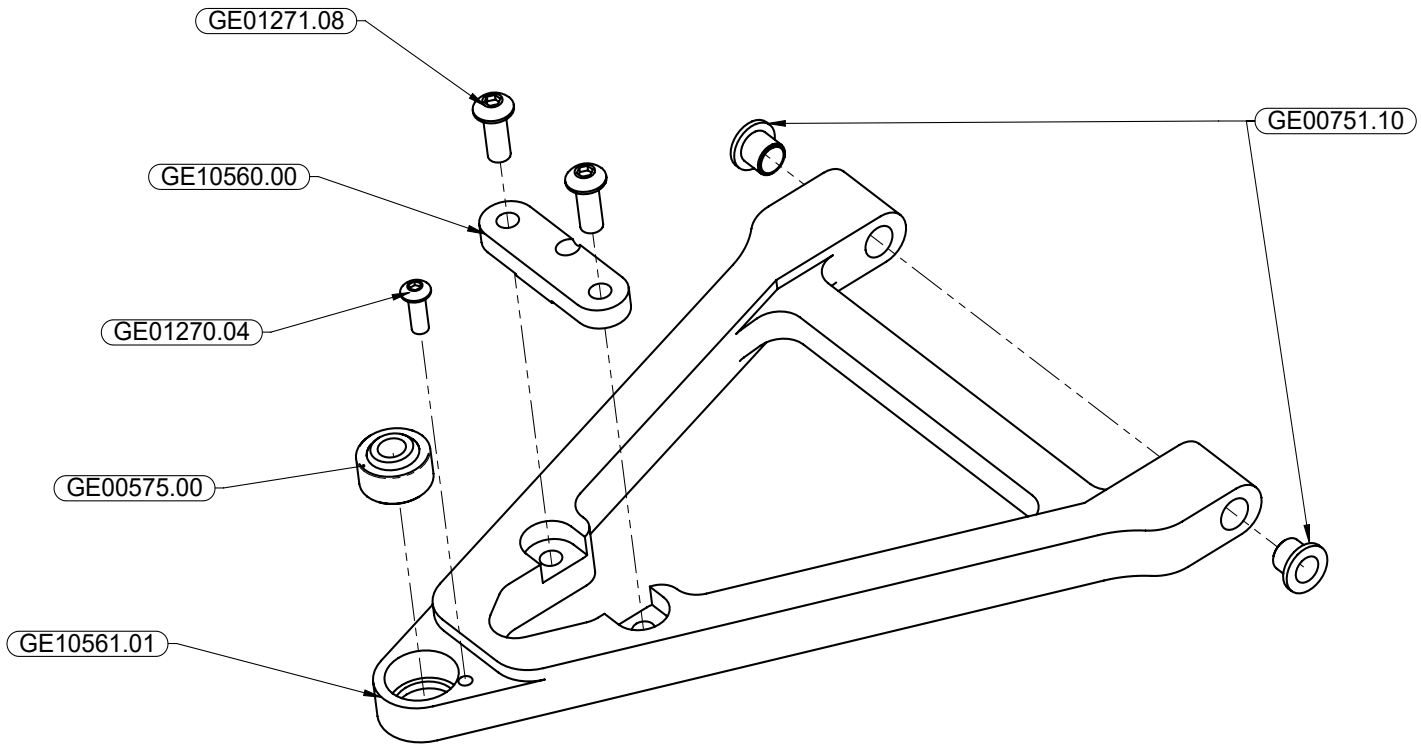
GE01271.08
GE10560.00
GE01270.04
GE00575.00
GE10561.01
GE00751.10

FR2-018DX

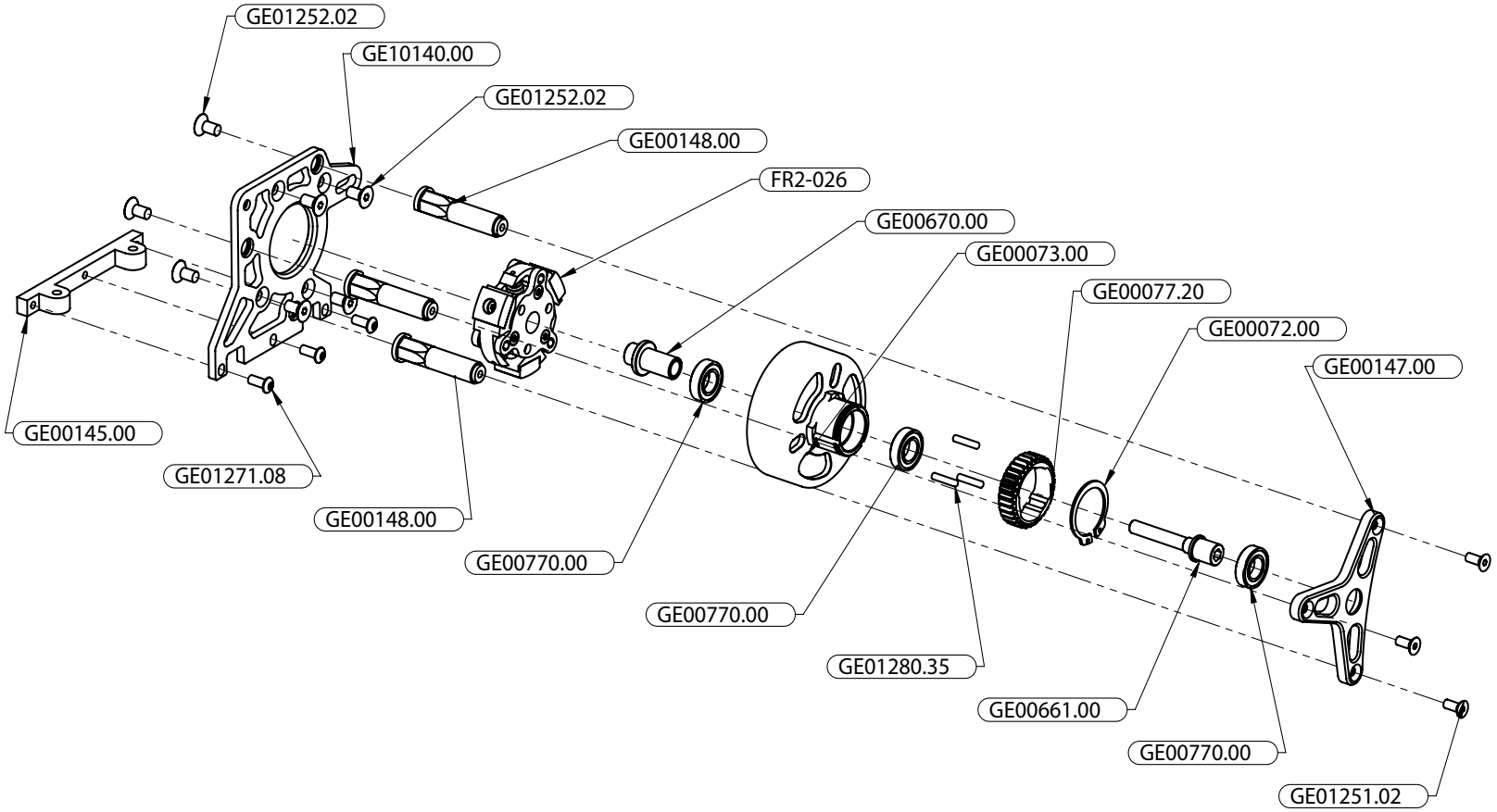
GE01252.02
GE10140.00
GE01252.02
GE00148.00
FR2-026
GE00670.00
GE00073.00
GE00077.20
GE00072.00
GE00147.00
GE00145.00
GE01271.08
GE00148.00
GE00770.00
GE00770.00
GE01280.35
GE00661.00
GE00770.00
GE01251.02

FR2-027

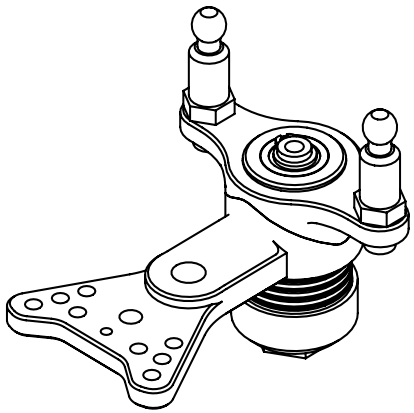

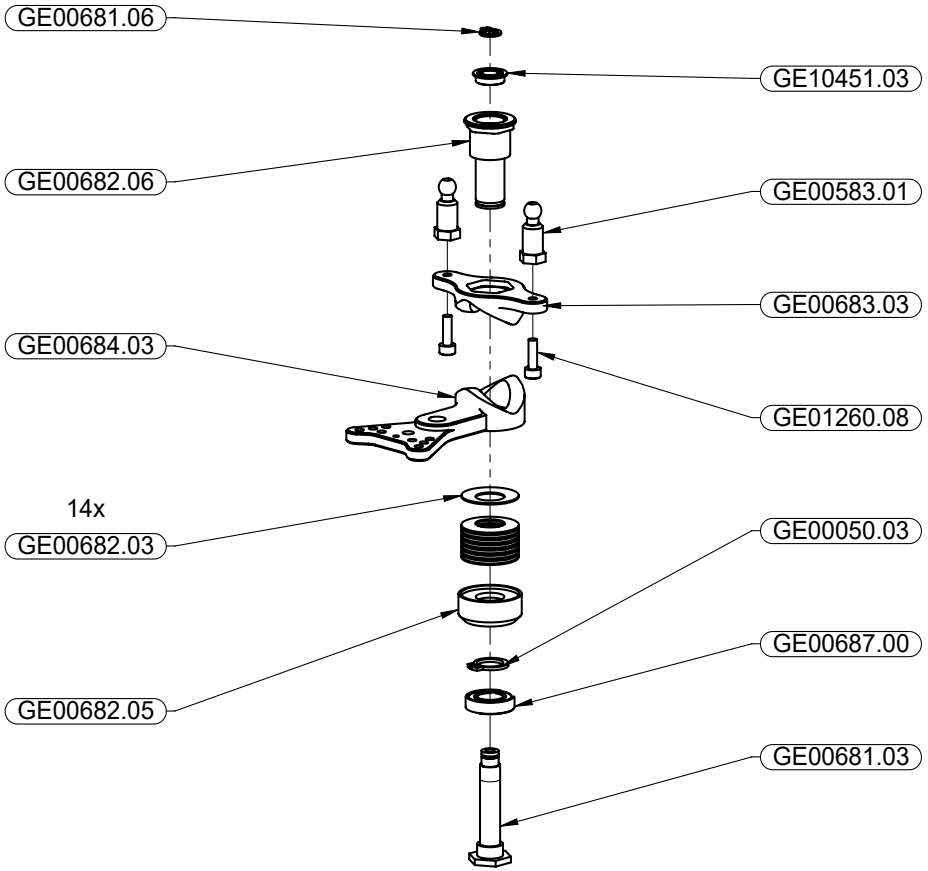
GE00681.06
GE10451.03
GE00682.06
GE00583.01
GE00683.03
GE00684.03
GE01260.08
14x
GE00682.03
GE00050.03
GE00687.00
GE00682.05
GE00681.03

GE00685.10

[redacted]